GENERAL DESCRIPTION

The XR28V384 (V384) is a quad Universal Asynchronous Receiver and Transmitter (UART) for the Intel Low Pin Count (LPC) bus interface. This device can replace or supplement a Super I/O device to add additional serial ports to the system.

The V384 UARTs support any 16-bit I/O address supported by the system. The register set is based on the industry standard 16550 UART, so the V384 operates with the standard serial port drivers without requiring a custom driver to be installed.

The 128 byte Transmit and Receive FIFOs reduce CPU overhead and minimize the chance of buffer overflow and data loss. In addition to the 16550 UART registers, there are also Configuration register set where enhanced features such as the 9-bit (multidrop) mode, IrDA mode and the Watchdog Timer can be enabled.

The V384 is available in a 48-pin TQFP package.

APPLICATIONS

- Industrial and Embedded PCs
- Factory Automation and Process Controls
- Network Routers
- System Board Designs

FEATURES

- **128 Byte Transmit and Receive FIFO**
- Compliant to LPC 1.1 Specifications
- **-40°C to +85°C Industrial Temp Operation**
- Watchdog Timer with WDTOUT# signal
- 4 Independent UART channels
  - Programmable I/O mapped base addresses
  - Data rates up to 3 Mbps
  - Selectable RX FIFO interrupt trigger levels
  - **Auto RS-485 Half-Duplex Control mode**
  - Programmable character lengths (5, 6, 7, 8) with even, odd, or no parity
  - IrDA mode and separate IRTXA# and IRRXA# pins for the first UART channel
  - 9-bit (Multidrop) mode
- External 24MHz/48MHz clock
- **Single 3.3V Supply Voltage (±10%)**
- 5V tolerant inputs
- **48-TQFP package (7mm x 7mm)**

The product (or products) mentioned in this datasheet are no longer being manufactured and may not be ordered (EOL)

FIGURE 1. XR28V384 BLOCK DIAGRAM

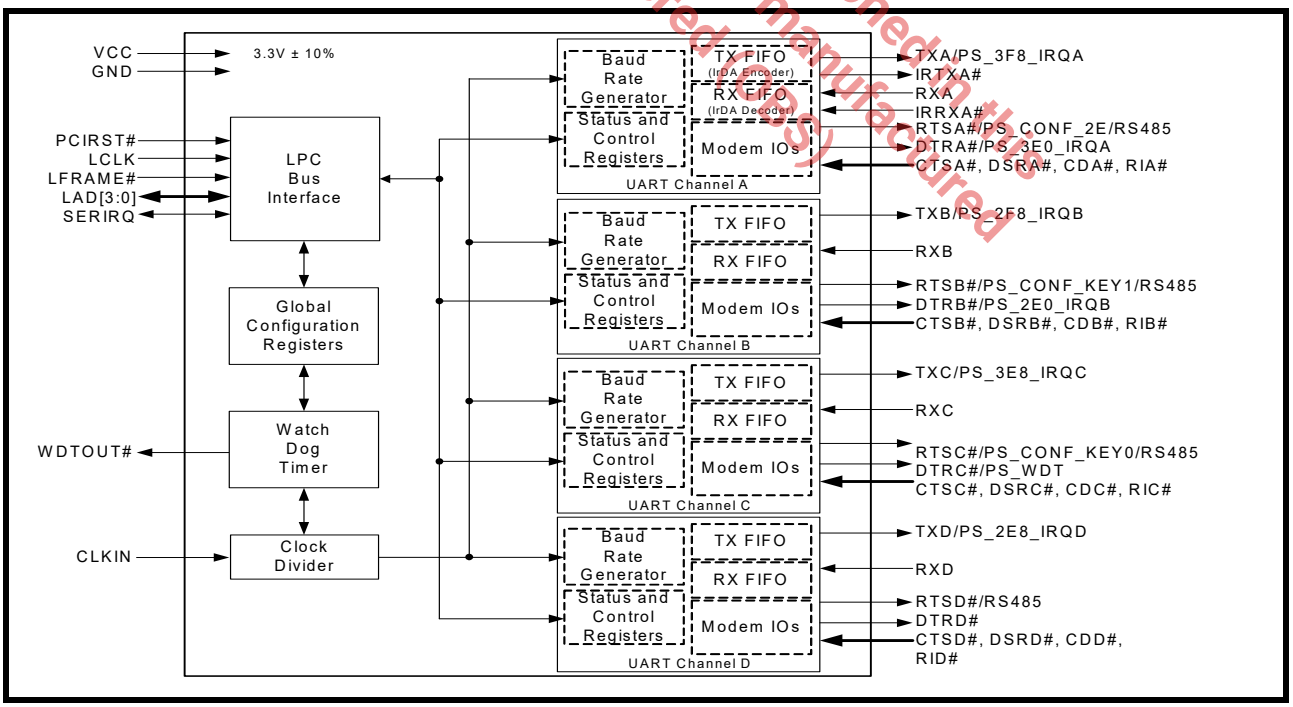

FIGURE 2. PIN OUT ASSIGNMENT

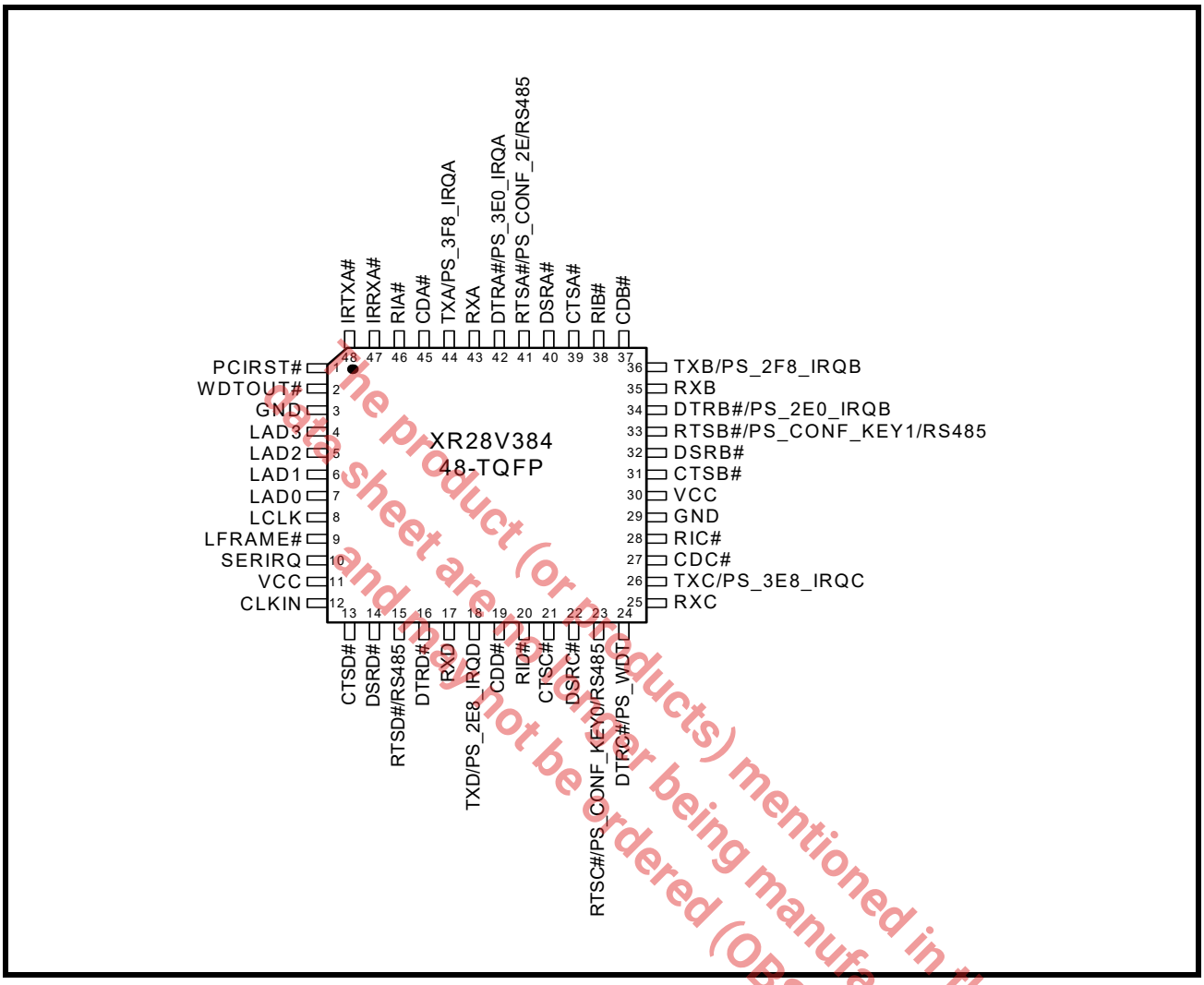

The product (or products) mentioned in this data sheet are no longer being manufactured and may not be ordered (OBS)

Ordering Information[1]

PART NUMBER	OPERATING TEMPERATURE RANGE	LEAD-FREE	PACKAGE	PACKAGING METHOD
XR28V384IM48-F	-40°C to +85°C	Yes[2]	48-Lead TQFP	Tray
XR28V384IM48TR-F				Tape and Reel
XR28V384IM48-0A-EB	XR28V384 Evaluation Board			

NOTES:

1. *Refer to www.exar.com/XR28V384 for most up-to-date Ordering Information.*
2. *Visit www.exar.com for additional information on Environmental Rating.*

PIN DESCRIPTIONS

Pin Description

NAME	48-TQFP PIN#	TYPE	DESCRIPTION
LPC BUS INTERFACE			
PCIRST#	1	I	Active low Reset signal.
LAD3 LAD2 LAD1 LAD0	4 5 6 7	I/O	Multiplexed address / data bus [3:0]. See 'Section 1.2, LPC Bus Interface'.
LCLK	8	I	LPC clock input up to 33.3MHz.
LFRAME#	9	I	Active low LPC Frame signal indicates start of a new cycle or termination of a broken cycle.
SERIRQ	10	I/O	Bi-directional pin for sending interrupts. By default this pin is tri-stated when idle. Interrupts can be active high or low. See 'Section 1.2.1, Serial IRQ' and See 'Section 2.2.1.3, Interrupt Enable Register (IER) - Read/Write' for more information regarding interrupts.
UART I/O INTERFACE			
CTSD#	13	I	UART Channel D Clear-to-Send (active low) or general purpose input. This input should be connected to VCC or GND when not used.
DSRD#	14	I	UART Channel D Data-Set-Ready (active low) or general purpose input. This input should be connected to VCC or GND when not used.
RTSD#/RS485	15	O	UART Channel D Request-to-Send (active low) or general purpose output or Automatic RS485 Half Duplex control pin. See 'Section 1.4.4, Auto RS-485 Half-Duplex Control'.
DTRD#	16	O	UART Channel D Data-Terminal-Ready (active low) or general purpose output.
RXD	17	I	UART Channel D Receive Data. Normal receive data input must idle at logic 1 condition. This input should be connected to VCC or GND when not used.
TXD / PS_2E8_IRQD	18	O	UART Channel D Transmit Data. The TXD signal will be a logic 1 during reset or idle (no data). If it is not used, leave it unconnected. This pin has an internal pull-up resistor and is sampled upon power-up or reset. This will determine the default register settings for UART channel D. The registers can later be modified by the software. See Table 1 'UART Power On Configuration'.
CDD#	19	I	UART Channel D Carrier-Detect (active low) or general purpose input. This input should be connected to VCC or GND when not used.
RID#	20	I	UART Channel D Ring-Indicator (active low) or general purpose input. This input should be connected to VCC or GND when not used.
CTSC#	21	I	UART Channel C Clear-to-Send (active low) or general purpose input. This input should be connected to VCC or GND when not used.
DSRC#	22	I	UART Channel C Data-Set-Ready (active low) or general purpose input. This input should be connected to VCC or GND when not used.

The product (or products) mentioned in this data sheet are no longer being manufactured and may not be ordered (OBS)

Pin Description

NAME	48-TQFP PIN#	TYPE	DESCRIPTION
RTSC# / PS_CONF_KEY0/ RS485	23	O	UART Channel C Request-to-Send (active low) or general purpose output or Automatic RS485 Half-Duplex control pin. See 'Section 1.4.4, Auto RS-485 Half-Duplex Control'. This pin has an internal pull-up resistor and is sampled upon power-up or reset. See Table 1 'UART Power On Configuration'.
DTRC# / PS_WDT	24	O	UART Channel C Data-Terminal-Ready (active low) or general purpose output. This pin has an internal pull-up resistor and is sampled upon power-up or reset. The registers can later be modified by the software. See Table 1 'UART Power On Configuration'.
RXC	25	I	UART Channel C Receive data. Normal receive data input must idle at logic 1 condition. This input should be connected to VCC or GND when not used.
TXC / PS_3E8_IRQC	26	O	UART Channel C Transmit Data. The TXC signal will be a logic 1 during reset or idle (no data). If it is not used, leave it unconnected. This pin has an internal pull-up resistor and is sampled upon power-up or reset. This will determine the default register settings for UART channel C. The registers can later be modified by the software. See Table 1 'UART Power On Configuration'.
CDC#	27	I	UART Channel C Carrier-Detect (active low) or general purpose input. This input should be connected to VCC or GND when not used.
RIC#	28	I	UART Channel C Ring-Indicator (active low) or general purpose input. This input should be connected to VCC or GND when not used.
CTSB#	31	I	UART Channel B Clear-to-Send (active low) or general purpose input. This input should be connected to VCC or GND when not used.
DSRB#	32	I	UART Channel B Data-Set-Ready (active low) or general purpose input. This input should be connected to VCC or GND when not used.
RTSB# / PS_CONF_KEY1/ RS485	33	O	UART Channel B Request-to-Send (active low) or general purpose output or automatic RS485 Half-Duplex control pin. See 'Section 1.4.4, Auto RS-485 Half-Duplex Control'. This pin has an internal pull-up resistor and is sampled upon power-up or reset See Table 1 'UART Power On Configuration'.
DTRB# / PS_2E0_IRQB	34	O	UART Channel B Data-Terminal-Ready (active low) or general purpose output. This pin has an internal pull-up resistor and is sampled upon power-up or reset. This will determine the default register settings for UART channel B. The registers can later be modified by the software. See Table 1 'UART Power On Configuration'.
RXB	35	I	UART Channel B Receive data. Normal receive data input must idle at logic 1 condition. This input should be connected to VCC or GND when not used.
TXB / PS_2F8_IRQB	36	O	UART Channel B Transmit Data. The TXB signal will be a logic 1 during reset or idle (no data). If it is not used, leave it unconnected. This pin has an internal pull-up resistor and is sampled upon power-up or reset. This will determine the default register settings for UART Channel B. The registers can later be modified by the software. See Table 1 'UART Power On Configuration'.
CDB#	37	I	UART Channel B Carrier-Detect (active low) or general purpose input. This input should be connected to VCC or GND when not used.

The product(s) mentioned in this data sheet are no longer being manufactured and may not be ordered (OBS)

Pin Description

NAME	48-TQFP PIN#	TYPE	DESCRIPTION
RIB#	38	I	UART Channel B Ring-Indicator (active low) or general purpose input. This input should be connected to VCC or GND when not used.
CTSA#	39	I	UART Channel A Clear-to-Send (active low) or general purpose input. This input should be connected to VCC or GND when not used.
DSRA#	40	I	UART Channel A Data-Set-Ready (active low) or general purpose input. This input should be connected to VCC or GND when not used.
RTSA# / PS_CONF_2E/ RS485	41	O	UART Channel A Request-to-Send (active low) or general purpose output. This pin has an internal pull-up resistor and is sampled upon power-up or reset. The registers can later be modified by the software. **See Table 1 'UART Power On Configuration'**.
DTRA# / PS_3E0_IRQA	42	O	UART Channel A Data-Terminal-Ready (active low) or general purpose output. This pin has an internal pull-up resistor and is sampled upon power-up or reset. This will determine the default register settings for UART Channel A. The registers can later be modified by the software. **See Table 1 'UART Power On Configuration'**.
RXA	43	I	UART Channel A Receive data.The receive data input must idle at logic 1 condition. This input should be connected to VCC or GND when not used.
TXA / PS_3F8_IRQA	44	O	UART Channel A Transmit Data. The TXA signal will be a logic 1 during reset or idle (no data). If it is not used, leave it unconnected. This pin has an internal pull-up resistor and is sampled upon power-up or reset. This will determine the default register settings for UART Channel A. The registers can later be modified by the software. **See Table 1 'UART Power On Configuration'**.
CDA#	45	I	UART Channel A Carrier-Detect (active low) or general purpose input. This input should be connected to VCC or GND when not used.
RIA#	46	I	UART Channel A Ring-Indicator (active low) or general purpose input. This input should be connected to VCC or GND when not used.
IRRXA#	47	I	Infrared Receiver input. The infrared receive data input idles at logic 0. This input should be connected to GND when not used.
IRTXA#	48	O	Infrared Transmitter output. The IRTXA# signal will be a logic 0 during reset or idle (no data).
ANCILLARY SIGNALS			
CLKIN	12	I	Clock input 24 MHz or 48 MHz.
WDTOUT#	2	O	Active low watchdog timer output. This pin is open drain and needs a pull-up resistor if it is used. The registers can later be modified by the software. **See Table 1 'UART Power On Configuration'**.
POWER SIGNALS			
VCC	11, 30	Pwr	3.3V ± 10% power supply.
GND	3, 29	Pwr	Power supply common, ground.

Pin type: I=Input, O=Output, I/O= Input/output, Pwr=Power supply.

The product(s) mentioned in this data sheet are no longer being manufactured and may not be ordered (OBS)

1.0 FUNCTIONAL DESCRIPTIONS

1.1 Power on Strapping Options

At power-on, strapping options for each pin listed in Table 1 result in the register values based upon the pin state selected. These register values can also be modified by the software.

1.1.1 UART/Watchdog Timer Options

The V384 provides seven pins for power on hardware strapping options to select the settings of the UART channels and Watchdog Timer.

TABLE 1: UART POWER ON CONFIGURATION

PIN NUMBER	PIN NAME	PIN STATE	REGISTER VALUES				COMMENT
			ENABLE (0x30)	BASE ADDRESS HIGH REGISTER (0x60)	BASE ADDRESS LOW REGISTER (0x61)	IRQSEL (0x70)	
18	TXD / PS_2E8_IRQD	1	0x1	0x2	0xE8	0x9	
		0	0x0	0x0	0x0	0x0	
26	TXC / PS_3E8_IRQC	1	0x1	0x3	0xE8	0x5	
		0	0x0	0x0	0x0	0x0	
34	DTRB# / PS_2E0_IRQB	1	0x1	0x2	0xE0	0x4	When both pins are high, the base address will be 0x2F8.
		0	0x0	0x0	0x0	0x0	
36	TXB / PS_2F8_IRQB	1	0x1	0x2	0xF8	0x4	
		0	0x0	0x0	0x0	0x0	
42	DTRA# / PS_3E0_IRQA	1	0x1	0x3	0xE0	0x3	When both pins are high, the base address will be 0x3F8.
		0	0x0	0x0	0x0	0x0	
44	TXA / PS_3F8_IRQA	1	0x1	0x3	0xF8	0x3	
		0	0x0	0x0	0x0	0x0	
24	DTRC# / PS_WDT	1	0x1	0x4	0x42	0x0	
		0	0x0	0x0	0x0	0x0	

The product (or products) mentioned in this data sheet are no longer being manufactured and may not be ordered (OBS)

After power-on, the Enable, Base Address High & Low, IRQSEL registers can be modified by the software.

1.1.2 Configuration Port and Key Selection Options

1.1.2.1 Configuration Port Selection Option

The configuration registers are programmed by the index port and the data port. The port address is determined by the strap pin RTSA#/PS_CONF_2E/RS485. If an external pull-down resistor is not installed, the default value of the RTSA#/PS_CONF_2E/RS485 pin is '1' when the system powers on. Therefore, the default index port address is 0x2E and the data port address is 0x2F.

TABLE 2: CONFIGURATION PORT SELECTION

RTSA#/PS_CONF_2E/RS485 (PIN 41)	INDEX PORT ADDRESS	DATA PORT ADDRESS
0	0x4E	0x4F
1 (default)	0x2E	0x2F

1.1.2.2 Configuration Entry Key Options

In order to enable the configuration register access mode, the entry key needs to be written consecutively twice to the index port. The entry key is generated by the power on setting pins RTSB#/PS_CONF_KEY1/ RS485 and RTSC#/PS_CONF_KEY0/RS485.

TABLE 3: CONFIGURATION ENTRY KEY

RTSB#/PS_CONF_KEY1/RS485 (PIN 33)	RTSC#/PS_CONF_KEY0/RS485 (PIN 23)	ENTRY KEY
0	0	0x77
0	1	0xA0
1	0	0x87
1	1	0x67 (Default)

In order to disable the configuration register access mode, 0xAA must be written to the index port.

1.1.2.3 Example

1.1.2.3.1 Index port address 0x2E & Data port address 0x2F (default)

```
write (0x2E, 0x67);
write (0x2E, 0x67);          //write entry key (0x67) twice to configuration port
                             //Enable access to the configuration registers
write (0x2E, 0x20);          //Select the DEV_ID_M register
read (0x2F);                 //Read the DEV_ID_M register
write (0x2E, 0x21);          //Select the DEV_ID_L register
read (0x2F);                 //Read the DEV_ID_L register
write (0x2E, 0x25);          //Select the Clock Select Register
write (0x2F, 0x1);           //Select the input clock frequency 48 MHz
write (0x2E, 0x7);           //Select the LDN register
write (0x2F, 0x1);           //Select the UART Channel B
write (0x2E, 0xF6);          //Select the FIFO Mode Select Register of UART Channel B
write (0x2F, 0x3);           //Set the FIFO size 128 bytes,
                             //RX trigger level 1, 4, 8, 14 and no delay for THR empty interrupt
write (0x2E, 0x30);
write (0x2F, 0x1);           //Enable the UART Channel B
write (0x2E, 0xAA);          //Disable access to configuration registers
```

The product (or products) mentioned in this data sheet are no longer being manufactured and may not be ordered (OBS)

1.1.2.3.2 Index port address 0x4E & Data port address 0x4F

```
write (0x4E, 0x67);
write (0x4E, 0x67);          //write entry key (0x67) twice to configuration port
                             //Enable access to the configuration registers
write (0x4E, 0x23);          //Select the VID_M register
read (0x4F);                 //Read the VID_M register
write (0x4E, 0x24);          //Select the VID_L register
read (0x4F);                 //Read the VID_L register
write (0x4E, 0x25);          //Select the Clock Select Register
write (0x4F, 0x0);           //Select the input clock frequency 24 MHz
write (0x4E, 0x7);           //Select the LDN register
write (0x4F, 0x0);           //Select the UART Channel A
write (0x4E, 0x60);
write (0x4F, 0x3);           //Set the UART Channel A base address high byte as 0x3
write (0x4E, 0x61);
write (0x4F, 0xF8);          //Set the UART Channel A base address low byte as 0xF8
write (0x4E, 0xF6);          //Select the FIFO Mode Select Register of UART Channel A
write (0x4F, 0x0);           //Set the FIFO size 16 bytes,
                             //RX trigger level 1, 4, 8, 14 and no delay for THR empty interrupt
write (0x4E, 0x30);
write (0x4F, 0x1);           //Enable the UART Channel A
write (0x4E, 0xAA);          //Disable access to the configuration registers
```

The product (or products) mentioned in this data sheet are no longer being manufactured and may not be ordered (OBS)

1.2 LPC Bus Interface

The LPC bus interface has a 4-bit multiplexed address/data bus, 1 reset signal, 1 clock and 1 control signal. It also has one interrupt signal. The V384 implements the following signals of the LPC bus.

- LFRAME# is used by the host to start or stop transfers.
- LCLK is a clock used for synchronization.
- PCIRST# is an active low reset signal.
- LAD[3:0] signal lines communicate device address, control (read, write, wait and transfer type), and data information over the LPC bus between a host and a peripheral.
- Interrupt requests are issued through SERIRQ.

1.2.1 Serial IRQ

The V384 supports a serial IRQ scheme specified in specification for Serialized IRQ support for PCI system Rev6.0 which allows SERIRQ pin to be shared with multiple devices. The SERIRQ signal is tri-stated when idle. The SERIRQ is divided into 3 types of time slots known as Frames: Start frame, IRQ frame, and Stop frame. The SERIRQ uses LCLK for timing. There are two modes of operation for SERIRQ signal: Quiet mode and Continuous mode. These two modes are discussed in further detail in 'Section 1.2.1.1, Start Frame'.

1.2.1.1 Start Frame

The Start frame indicates begining of the SERIRQ cycle. During this frame the SERIRQ is driven LOW for 4-8 clock cycles. It can be initiated by the host or V384 depending on the mode of operation.

In the Continuous mode, only the host controller initiates the Start frame to update the SERIRQ line information. The host controller drives the SERIRQ signal low for 4 to 8 clock periods. Upon a reset, the SERIRQ signal defaults to the Continuous mode for the host controller to initiate the first Start frame.

In the Quiet mode, the Start frame is initiated by the device/host. The V384 drives the SERIRQ signal active low for one clock to initiate a Start Frame, and then tri-states it immediately. The host controller will then take over driving SERIRQ signal low in the next clock and will continue driving the SERIRQ low for 3 to 7 clock periods. This makes the total number of clocks low for 4 to 8 clock periods. After these clocks, the host controller will drive the SERIRQ high for one clock and then tri-states it.

A Start Frame may not be initiated while SERIRQ is active. The SERIRQ is active between Start and Stop frames while it is idle between Stop and Start frames.

1.2.1.2 IRQ Frame

Once the start frame has been initiated, all the peripherals must start counting frames based on the rising edge of the clock (LCLK). Each IRQ Frame is three clocks: Sample phase, Recovery phase, and Turn-around phase. During the Sample phase, the peripheral drives SERIRQ low if the corresponding IRQ is active. If the corresponding IRQ is inactive, then SERIRQ will be left tri-stated. During the Recovery phase, the peripheral device drives the SERIRQ high. During the Turn-around phase, the peripheral device leaves the SERIRQ tri-stated. The V384 supports IRQ3, IRQ4, IRQ5, IRQ7, IRQ9, IRQ10, and IRQ11.

The product (or products) mentioned in this data sheet are no longer being manufactured and may not be ordered (OBS)

TABLE 4: SERIRQ SAMPLING PERIODS

IRQ/DATA FRAME	SIGNAL SAMPLED	NUMBER OF CLOCKS PAST START
1	IRQ0	2
2	IRQ1	5
3	SMI#	8
4	IRQ3	11
5	IRQ4	14
6	IRQ5	17
7	IRQ6	20
8	IRQ7	23
9	IRQ8	26
10	IRQ9	29
11	IRQ10	32
12	IRQ11	35
13	IRQ12	38
14	IRQ13	41
15	IRQ14	44
16	IRQ15	47
17	IOCHCK#	50
18	INTA#	53
19	INTB#	56
20	INTC#	59
21	INTD#	62
32:22	Unassigned	95

1.2.1.3 Stop Frame

After all IRQ/Data Frames have been completed, the host controller will terminate SERIRQ by a Stop frame. Only the host controller can initiate the Stop frame by driving SERIRQ low for 2 or 3 clocks. If the Stop Frame is low for 2 clocks, the next SERIRQ cycle will be the Quiet mode whereas if it is low for 3 clocks, the next SERIRQ cycle will be the Continuous mode.

1.3 Watchdog Timer (WDT)

The WDT is typically used in a system to initiate any of the several types of corrective action, including processor reset, power cycling, fail-safe activation etc. The Watchdog timer of V384 is an 8 bit counter controlled by six registers. See "Section 2.1.2.2, Watchdog Timer Registers (LDN = 0x08)" on page 26. WDTOUT# idles HIGH and will transition LOW when a time out occurs. The V384 provides three time intervals: 10 ms, 1s and 1 minute allowing for timeouts ranging from approximately 2.5 seconds to more than 4 hours. See 'Section 2.1.2.2.4, WDT Timer Status and Control Register - Read/Write' to set up time interval.

The product (or products) mentioned in this data sheet are no longer being manufactured and may not be ordered (OBS)

1.4 UART

1.4.1 External Clock Input (CLKIN)

Along with LCLK, the V384 also needs an external clock for UART data communication. It can support any clock up to 48MHz. The 24MHz and 48MHz are the standard clock frequencies supported by the V384. See 'Section 2.1.1.5, Clock Select Register - Read/Write'.

1.4.1.1 Programmable Baud Rate Generator

Each UART has its own Baud Rate Generator (BRG) with a prescaler. The prescaler is controlled by Bit[1:0] of Enhanced Multifunction Register - Read/Write.

Table 5 shows the standard data rates available with a 24 MHz external clock at 16X sampling rate and internal clock frequency set to 1.8462 MHz. The divisor value can be calculated for DLL/DLM with the following equation.

divisor (decimal) = (Internal clock frequency) / (serial data rate x 16)

TABLE 5: TYPICAL DATA RATES WITH A 1.8462MHZ INTERNAL CLOCK

BAUD RATE (BPS)	DIVISOR FOR 16X CLOCK (DECIMAL)	DIVISOR FOR 16X CLOCK (HEX)	DLM PROGRAM VALUE (HEX)	DLL PROGRAM VALUE (HEX)	ACTUAL BAUD RATE	DATA RATE ERROR (%)
150	768	300	03	00	150.24	0.2
300	384	180	01	80	300.48	0.2
600	192	C0	00	C0	600.96	0.2
1200	96	60	00	60	1201.92	0.2
2400	48	30	00	30	2403.85	0.2
4800	24	18	00	18	4807.69	0.2
9600	12	0C	00	0C	9615.39	0.2
19200	6	06	00	06	19230.77	0.2
38400	3	03	00	03	38461.54	0.2
57600	2	02	00	02	57692.31	0.2
115200	1	01	00	01	115384.6	0.2

Table 8 lists the different internal clock settings.

1.4.2 Transmitter

The transmitter section comprises of an 8-bit Transmit Shift Register (TSR) and up to 128 bytes of FIFO which includes a byte-wide Transmit Holding Register (THR). TSR shifts out every data bit with the internal sampling clock. The transmitter sends the start bit followed by the number of data bits, inserts the proper parity bit if enabled, and adds the stop bit(s). The status of the THR and TSR are reported in the Line Status Register (LSR bit-5 and bit-6).

1.4.2.1 Transmit Holding Register (THR) - Write Only

The transmit holding register is an 8-bit register providing a data interface to the host processor. The host writes transmit data byte to the THR to be converted into a serial data stream including start bit, data bits, parity bit and stop bit(s). The least significant bit (Bit-0) becomes first data bit to go out. The THR is the input register to the transmit FIFO of up to 128 bytes when FIFO operation is enabled by FCR bit-0. Every time a write operation is made to the THR, the FIFO data pointer is automatically bumped to the next sequential data location.

1.4.2.2 Transmitter Operation in non-FIFO Mode

The host loads transmit data to THR one character at a time. The THR empty flag (LSR bit-5) is set when the data byte is transferred to TSR. THR flag can generate a transmit empty interrupt (ISR bit-1) when it is enabled by IER bit-1. The TSR flag (LSR bit-6) is set when TSR becomes completely empty.

The Product (or products) mentioned in this data sheet are no longer being manufactured and may not be ordered (OBS)

FIGURE 3. TRANSMITTER OPERATION IN NON-FIFO MODE

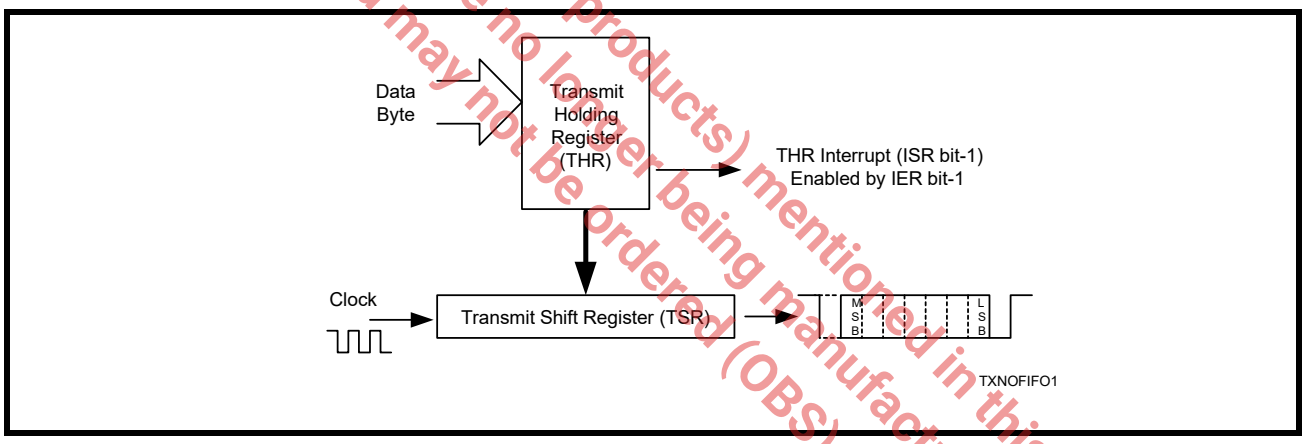

1.4.2.3 Transmitter Operation in FIFO Mode

The host may fill the transmit FIFO with up to 128 bytes of transmit data. The THR empty flag (LSR bit-5) is set whenever the FIFO is empty. The THR empty flag can generate a transmit empty interrupt (ISR bit-1) when the FIFO becomes empty. The transmit empty interrupt is enabled by IER bit-1. The TSR flag (LSR bit-6) is set when TSR/FIFO becomes empty.

FIGURE 4. TRANSMITTER OPERATION IN FIFO MODE

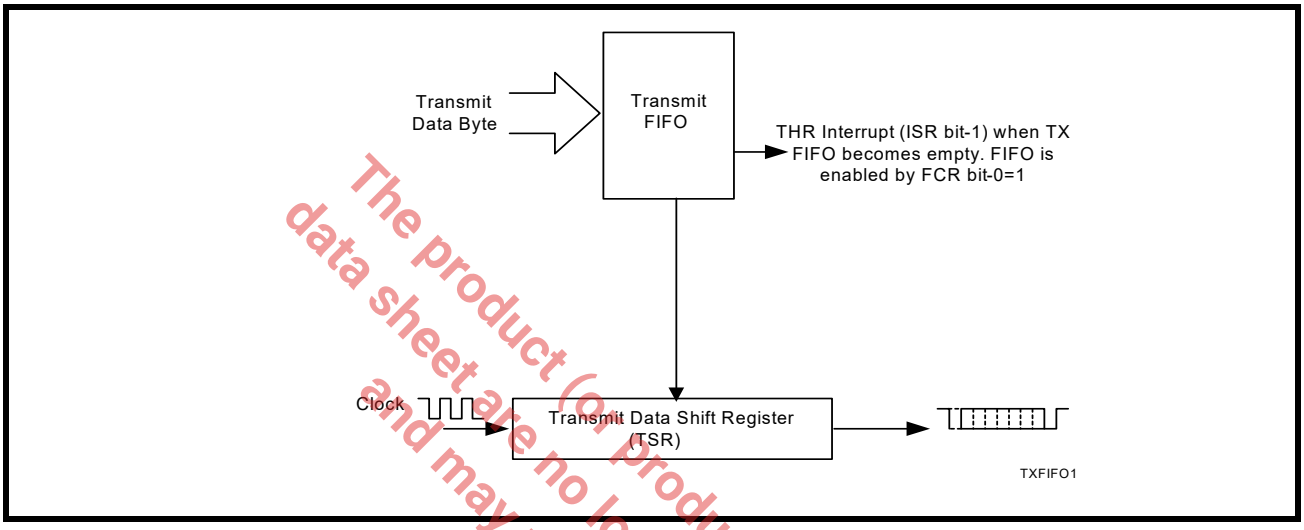

The product (or products) mentioned in this data sheet are no longer being manufactured and may not be ordered (OBS)

1.4.3 Receiver

The receiver section contains an 8-bit Receive Shift Register (RSR) and up to 128 bytes of FIFO which includes a byte-wide Receive Holding Register (RHR). The RSR uses the internal sampling clock for timing. It verifies and validates every bit on the incoming character in the middle of each data bit. On the falling edge of a start or false start bit, an internal receiver counter starts counting at the clock rate. After 8 clocks the start bit period should be at the center of the start bit. At this time the start bit is sampled and if it is still a logic 0 it is validated. Evaluating the start bit in this manner prevents the receiver from assembling a false character. The rest of the data bits and stop bits are sampled and validated in this same manner to prevent false framing. If there were any error(s), they are reported in the LSR register bits 2-4. Upon unloading the receive data byte from RHR, the receive FIFO pointer is bumped and the error tags are immediately updated to reflect the status of the data byte in RHR register. RHR can generate a receive data ready interrupt upon receiving a character or delay until it reaches the FIFO trigger level. Furthermore, data delivery to the host is guaranteed by a receive data ready time-out interrupt when data is not received for 4 word lengths as defined by LCR[1:0] plus 12 bits time. This is equivalent to 3.7-4.6 character times. The RHR interrupt is enabled by IER bit-0. See Figure 5.

1.4.3.1 Receive Holding Register (RHR) - Read-Only

The Receive Holding Register is an 8-bit register that holds a receive data byte from the Receive Shift Register. It provides the receive data interface to the host processor. The RHR register is part of the receive FIFO of up to 128 bytes by 11-bits wide, the 3 extra bits are for the 3 error tags to be reported in LSR register. When the FIFO is enabled by FCR bit-0, the RHR contains the first data character received by the FIFO. After the RHR is read, the next character byte is loaded into the RHR and the errors associated with the current data byte are immediately updated in the LSR bits 2-4.

FIGURE 5. RECEIVER OPERATION IN NON-FIFO MODE

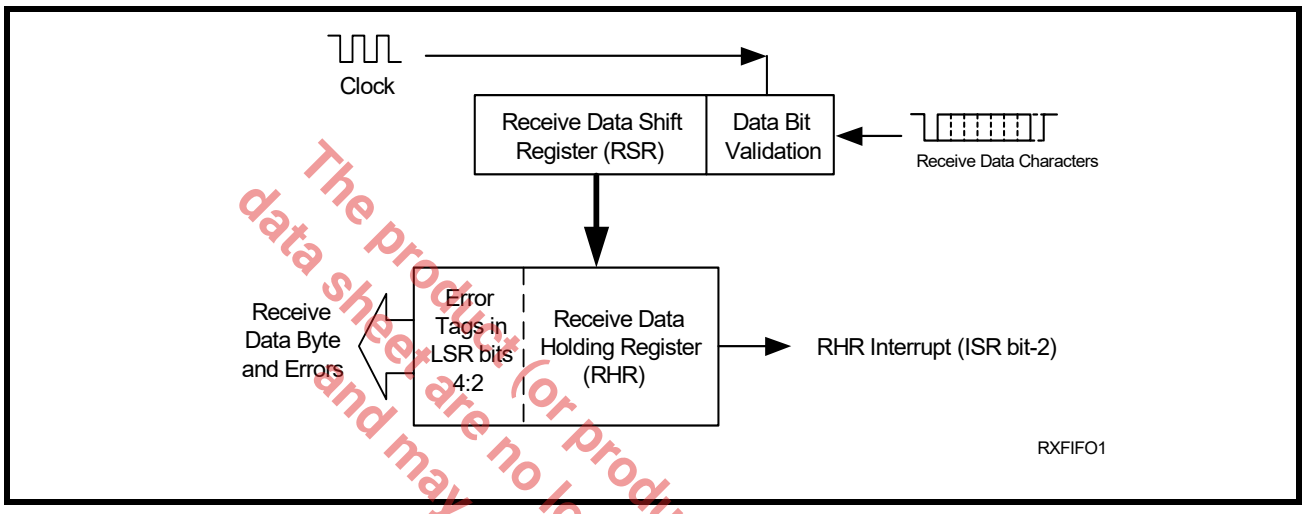

FIGURE 6. RECEIVER OPERATION IN FIFO MODE

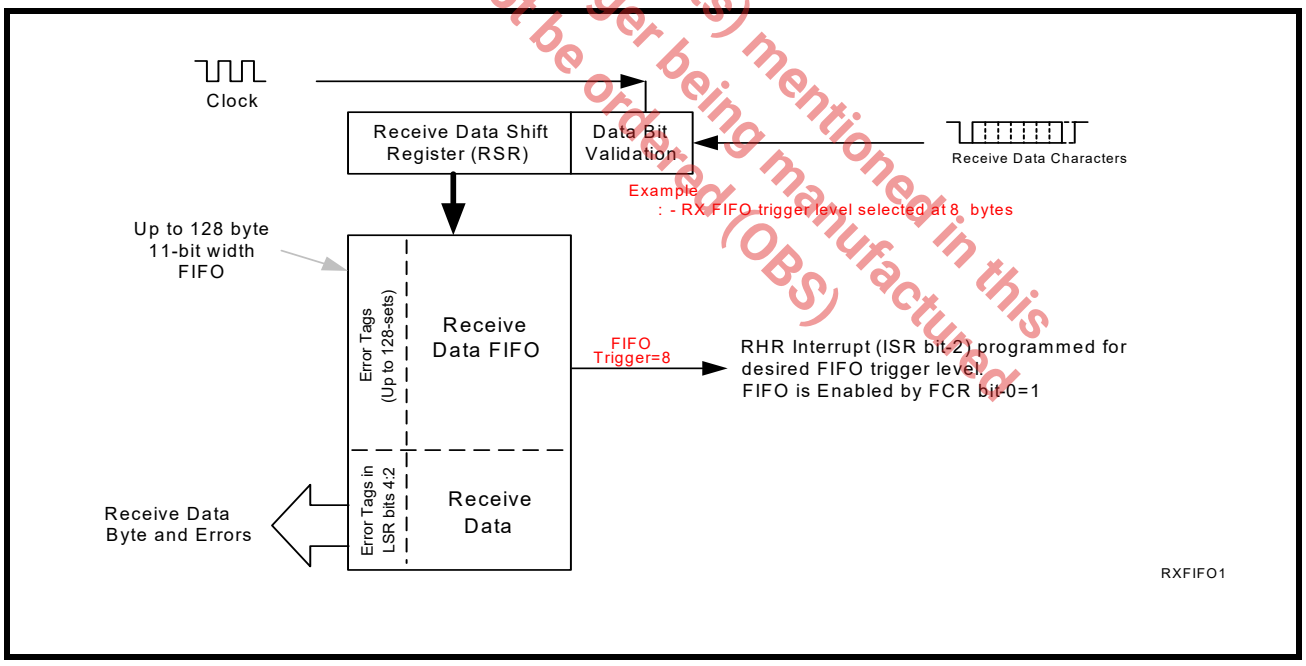

The product(s) mentioned in this data sheet are no longer being manufactured and may not be ordered (OBS)

1.4.4 Auto RS-485 Half-Duplex Control

The Auto RS-485 Half-Duplex Control feature changes the behavior of the RTS#/RS485 pin when enabled by **Enhanced Multifunction Register - Read/Write** bit-4. If enabled, by default, it de-asserts RTS#/RS485 ouput following the last stop bit of the last character that has been transmitted. This helps in turning around the transceiver to receive the remote station's response. When the host is ready to transmit data packet, it only has to load data bytes to the transmit FIFO. The transmitter automatically asserts RTS#/RS485 output prior to sending the data. The polarity of RTS#/RS485 signal can be modified by bit-5 of Enhanced Multifunction register.

1.4.5 Normal Multidrop (9-bit) Mode

Normal multidrop mode is enabled when bit-7 of Enhanced Multifunction register in the UART Device Configuration Registers is set to '1'. In the multidrop (9-bit) mode, the parity bit becomes the address/data bit.

If a data byte is received (9th bit is '0'), it will be loaded into the RX FIFO and the parity error bit will be '0'. If an address byte is received (9th bit is '1'), it will be loaded into the RX FIFO and the parity error bit will be '1'. When the address byte has been received, the software will need to examine the byte: If the address matches its slave address, the receiver will receive the subsequent data; If the address does not match its slave address, then the receiver will discard the data.

1.4.5.1 Auto Address Detection

Auto Address Detection mode is enabled when bit-6 of Enhanced Multifunction register (0xF0) in UART device configuration registers set is set to '1'. The desired slave address will need to be written into the 9-bit mode slave address register (0xF4) in the UART device configuration registers set. If the received byte is an address byte that does not match the programmed character in the 9-bit mode slave address register, the receiver will discard these data. Upon receiving an address byte that matches the 9-bit mode slave address register character, the receiver will automatically push the address byte into the RX FIFO and set the parity error bit in the LSR register. The receiver also generates an LSR interrupt if enabled. The receiver will then receive the subsequent data. If another address byte is received and does not match the programmed 9-bit mode slave address register value, then the receiver will ignore the data that follows.

The product (or products) mentioned in this data sheet are no longer being manufactured and may not be ordered (OBS)

1.4.6 Infrared Mode

The V384 UART Channel A includes the infrared encoder and decoder compatible to IrDA (Infrared Data Association) version 1.0. The infrared encoder sends out a 3/16 of a bit wide or 1.6 uS HIGH pulse for each “0” bit in the transmit data stream with a data rate up to 115.2 kbps. This signal encoding reduces the on-time of the infrared LED, hence reduces the power consumption. See **Figure 7**.

The infrared encoder and decoder are enabled by setting **Infrared Mode Control Register - Read/Write** bit-4 to a ’1’. The IRRXA# input assumes an idle level of logic zero after a reset and power up, see **Figure 7**. The IRRXA# input will assume an idle level of logic HIGH if bit-0 of the **Infrared Mode Control Register - Read/Write** is set to ’1’. The IRTXA# is idle at LOW by default. The IRTXA# will be idle at HIGH if bit-1 of the **Infrared Mode Control Register - Read/Write** is set to ’1’.

Typically, the wireless infrared decoder receives the input pulse from the infrared sensing diode on the IRRXA# pin. Each time it senses a light pulse, it returns a logic 0 to the data bit stream.

FIGURE 7. INFRARED TRANSMIT DATA ENCODING AND RECEIVE DATA DECODING

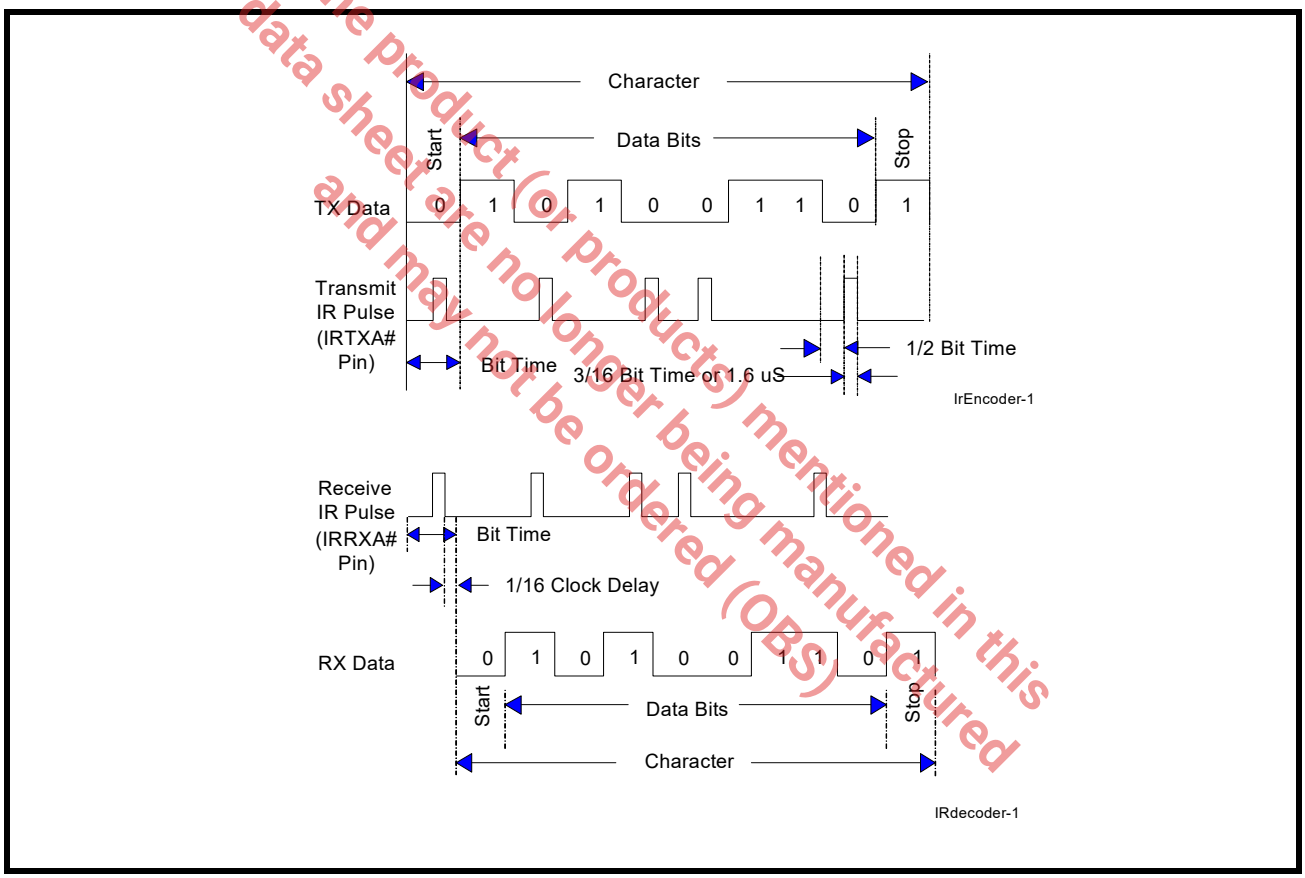

The product(s) mentioned in this data sheet are no longer being manufactured and may not be ordered (OBS)

1.4.7 Internal Loopback

The V384 provides an internal loopback capability for system diagnostic purposes. The internal loopback mode is enabled by setting MCR register bit-4 to logic 1. Figure 8 shows how the modem port signals are re-configured. Transmit data from the transmit shift register output is internally routed to the receive shift register input allowing the system to receive the same data that it was sending. The TX pin is held HIGH or mark condition while RTS# and DTR# are de-asserted, and CTS#, DSR# CD# and RI# inputs are ignored. Caution: the RX input must be held HIGH during loopback test else upon exiting the loopback test the UART may detect and report a false “break” signal.

FIGURE 8. INTERNAL LOOPBACK

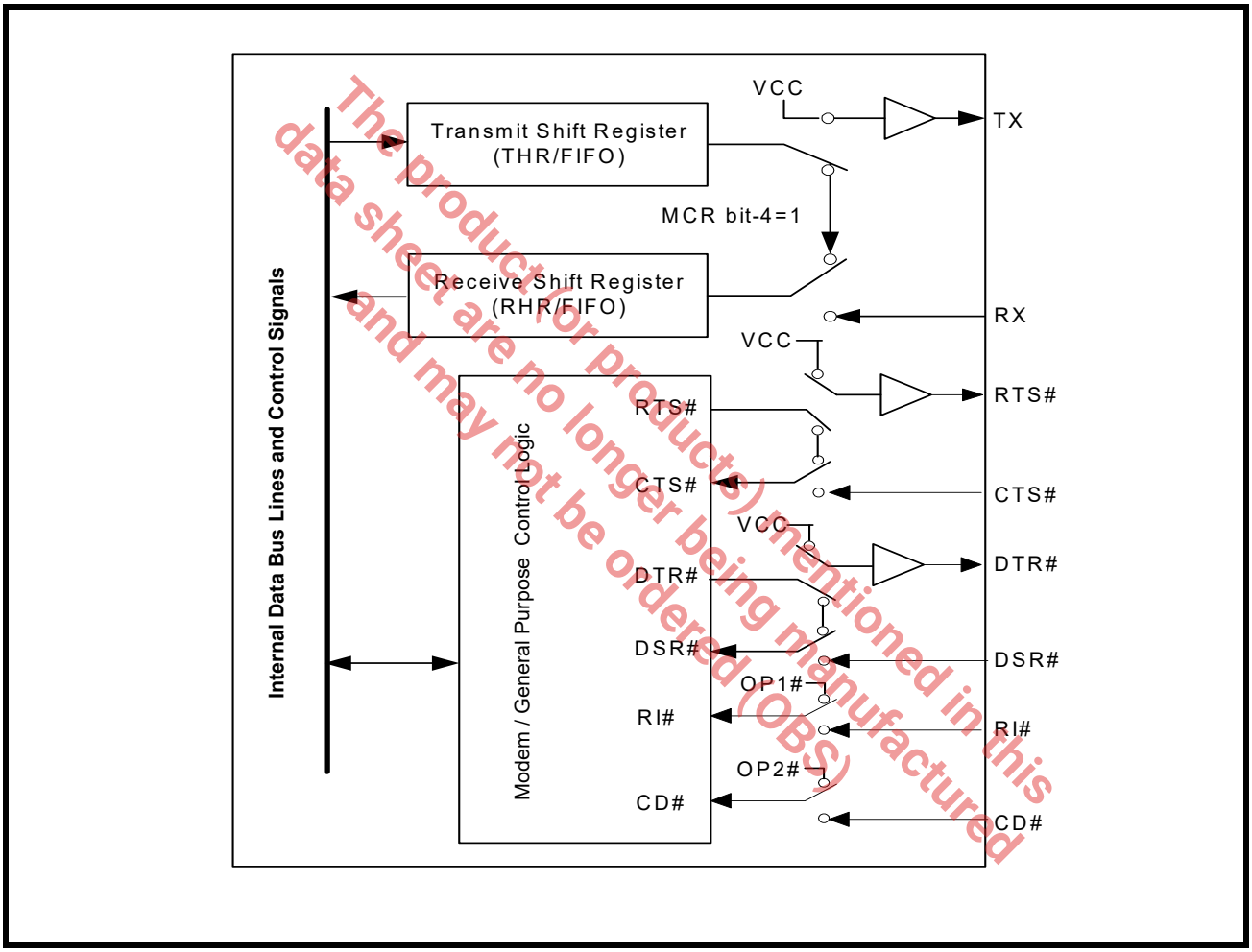

The product(s) mentioned in this data sheet are no longer being manufactured and may not be ordered (OBS)

1.5 Serial Transceiver Interface

The V384 is typically used with RS-232, RS-485 and IR transceivers. The following figure shows typical connections from the UART to the different transceivers. For more information on RS-232 and RS-485/422 transceivers, go to www.exar.com or send an e-mail to uarttechsupport@exar.com.

FIGURE 9. XR28V384 TYPICAL SERIAL INTERFACE CONNECTIONS

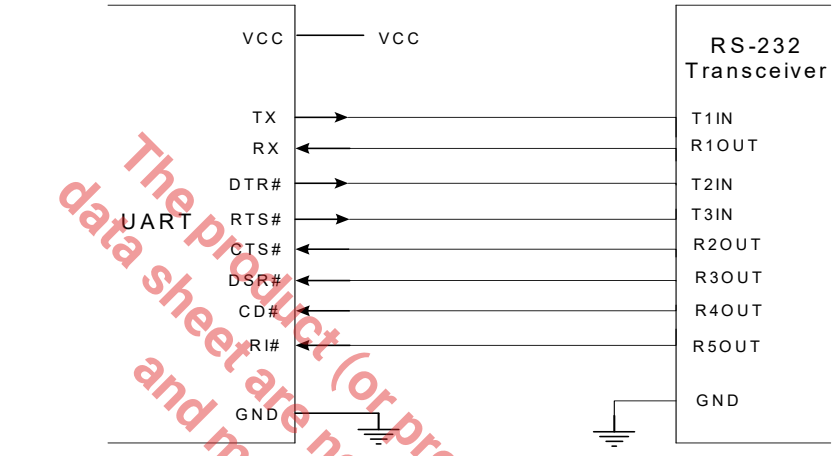

RS-232 Full-Modem Serial Interface

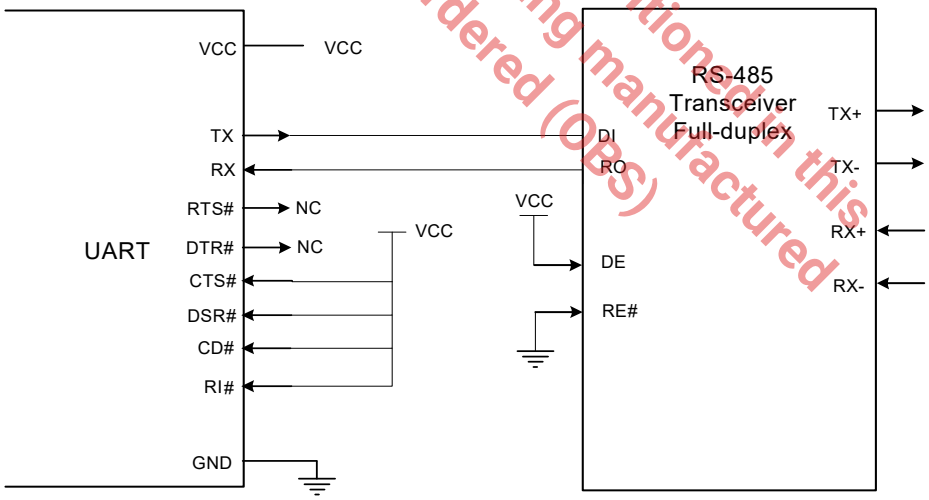

RS-485 Full-Duplex Serial Interface

The product (or products) mentioned in this data sheet are no longer being manufactured and may not be ordered (OBS)

FIGURE 10. XR28V384 TYPICAL SERIAL INTERFACE CONNECTIONS

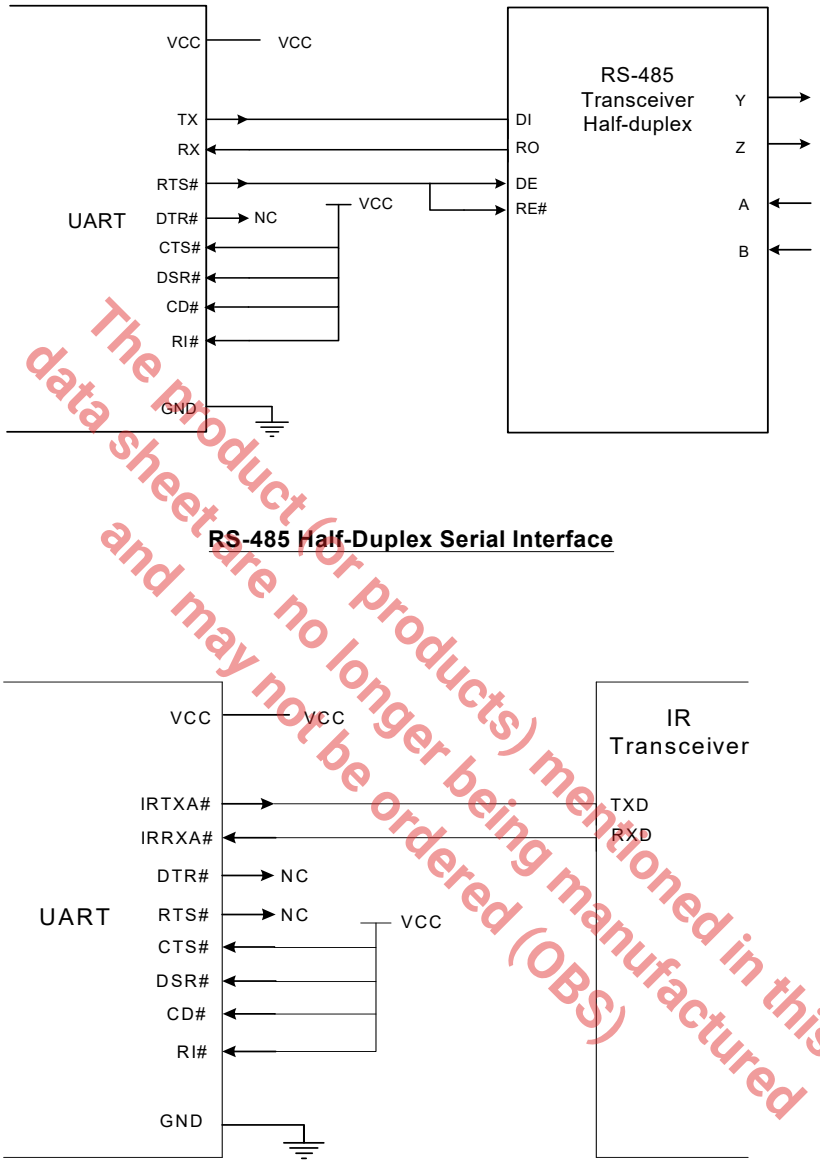

The product (or products) mentioned in this data sheet are no longer being manufactured and may not be ordered (OBS)

1.6 Device Reset

The PCIRST# input resets the internal registers and the serial interface outputs to their default states. The PCIRST# assertion for general system reset may occur at any time and may be asynchronous to LCLK.

2.0 REGISTER DETAILS

The Register map of V384 is primarily divided into two sections:

- Configuration Register set
- UART internal Register set

2.1 Configuration Register

There are two different sets of configuration registers: the Global Control Register set and the Device Configuration Register set. The Global Control Registers can be used to perform software reset, select clock input frequency, configure watchdog timer, configuration port selection and read Vendor ID and Device ID. The Device Configuration Registers configure all 4 UARTs to enable the UART channel, base address, IRQ channel, internal clock frequency, IR control, 9-bit mode slave address and FIFO mode. The watchdog timer can also be configured in the Device Configuration Registers set including enable the watchdog timer, configure base address, IRQ channel, timer count number and monitor the timer status.

- **Global Control Registers**

The Global Control Register set is the set of registers that are shared among all the devices of V384. Table 6 describes the list of all the Global Control Registers.

TABLE 6: LPC BUS GLOBAL CONTROL REGISTERS

ADDRESS [A7:A0]	REGISTER	READ/WRITE COMMENT	RESET STATE
0x02	Software Reset Register	Read/Write	Bits [7:0] = 0x00
0x07	Logic Device Number Register (LDN)	Read/Write	Bits [7:0] = 0x00
0x20	Device ID MSB Register (DEV_ID_M)	Read-only	Bits [7:0] = 0x03
0x21	Device ID LSB Register (DEV_ID_L)	Read-only	Bits [7:0] = 0x84
0x23	Vendor ID MSB Register (VID_M)	Read-only	Bits [7:0] = 0x13
0x24	Vendor ID LSB Register (VID_L)	Read-only	Bits [7:0] = 0xA8
0x25	Clock Select Register (CLKSEL)	Read/Write	Bits [7:0] = 0x00
0x26	Watchdog Timer Control Register (WDT)	Read/Write	Bits [7:0] = 0x00
0x27	Port Select Register	Read/Write	Bits [7:0] = 0x00

The product(or products) mentioned in this data sheet are no longer being manufactured and may not be ordered (OBS)

- **Device Configuration Registers**

The Device Configuration Register set is specific to each device of the V384. The V384 has two types of devices: 1) UART 2) Watchdog Timer. It has 4 UART devices and 1 Watchdog timer. All the UARTs have similar register set except UARTA. UARTA has an additional register to control IR function.

The Device Configuration register set can be accessed through indirect addressing described in 'Section 1.1.2.3, Example' . Table 7 lists the Device Configuration registers.

TABLE 7: DEVICE CONFIGURATION REGISTERS

	ADDRESS [A7:A0]	REGISTER	READ/WRITE	RESET STATE	COMMENT
UARTA (LDN=0x00)	0x30	UART Enable Register (ENABLE)	Read/Write	See Table 1 'UART Power On Configuration'	
	0x60	Base Address High Register	Read/Write		
	0x61	Base Address Low Register	Read/Write		
	0x70	IRQ Channel Select Register	Read/Write		
	0xF0	Enhanced Multifunction Register	Read/Write	0x00	
	0xF1	IR Control Register	Read/Write	0x44	
	0xF4	9-bit Mode Slave Address Register	Read/Write	0x00	
	0xF5	9-bit Mode Slave Address Mask Register	Read/Write	0x00	
	0xF6	FIFO Mode Select Register	Read/Write	0x00	
UARTB (LDN=0x01) UARTC (LDN=0x02) UARTD (LDN=0x03)	0x30	UART Enable Register (ENABLE)	Read/Write	See Table 1 'UART Power On Configuration'	
	0x60	Base Address High Register	Read/Write		
	0x61	Base Address Low Register	Read/Write		
	0x70	IRQ Channel Select Register	Read/Write		
	0xF0	Enhanced Multifunction Register	Read/Write	0x00	
	0xF4	9-bit Mode Slave Address Register	Read/Write	0x00	
	0xF5	9-bit Mode Slave Address Mask Register	Read/Write	0x00	
	0xF6	FIFO Mode Select Register	Read/Write	0x00	
WDT (LDN=0x08)	0x30	Watchdog Enable Register	Read/Write	0x01	See Table 1 'UART Power On Configuration'
	0x60	Base Address High Register	Read/Write	0x04	
	0x61	Base Address Low Register	Read/Write	0x42	
	0x70	IRQ Channel Select Register	Read/Write	0x00	
	0xF0	Timer Status and Control Register	Read/Write	0x02	
	0xF1	Timer Count Number Register	Read/Write	0x0A	

The product(s) mentioned in this data sheet are no longer being manufactured and may not be ordered (OBS)

2.1.1 Global Control Registers

2.1.1.1 Software Reset Register

Software Reset resets the Device Configuration registers to their factory defaults. Strapping pins from Table 1 are not sampled during a software reset.

Bit [0]: Software reset

- Logic 0 = Disable software reset (default).
- Logic 1 = Enable software reset. After the software reset, this bit will turn to '0' automatically.

Bits [7:1]: Reserved

2.1.1.2 Logic Device Number Register - Read/Write

This register selects device configuration register set among the 4 channel UARTs and the watchdog timer.

Bits [7:0]: Select different device configuration register set.

- 0x00 = Select UART A device configuration register (default).
- 0x01 = Select UART B device configuration register.
- 0x02 = Select UART C device configuration register.
- 0x03 = Select UART D device configuration register.
- 0x08 = Select Watchdog Timer device configuration register.

2.1.1.3 Device ID MSB/LSB Register - Read only

***DEV_ID_M* (0x20):** This register provides upper byte device ID for XR28V384. The default value is 0x03.

DEV_ID_L (0x21): This register provides lower byte device ID for XR28V384. The default value is 0x84.

2.1.1.4 Vendor ID MSB/LSB Register - Read only

VID_M (0x23): This register value provides upper byte of Exar's Vendor ID. The default value is 0x13.

VID_L (0x24): This register value provides lower byte of Exar's Vendor ID. The default value is 0xA8.

2.1.1.5 Clock Select Register - Read/Write

This register selects the clock frequency.

Bit [0]: Clock select

- Logic 0 = The CLKIN is 24 MHz (default).
- Logic 1 = The CLKIN is 48 MHz.

Bits [7:1]: Reserved

2.1.1.6 Watchdog Timer Control Register - Read/Write

This register controls the watchdog timer.

Bit [0]: Assert a low pulse from WDTOUT# pin

- Logic 0 = Watchdog timer (WDT) will assert a low pulse from WDTOUT# pin (default).
- Logic 1 = Watchdog timer (WDT) will not assert a low pulse from WDTOUT# pin, but the timeout status will be set.

Bit [1]: Restart timer

- Logic 0 = Read watchdog timer (WDT) will restart the timer (default).
- Logic 1 = Read watchdog timer (WDT) will not restart the timer.

The product (or product(s) mentioned in this data sheet) are no longer being manufactured and may not be ordered (OBS)

Bits [7:2]: Reserved

2.1.1.7 Port Select Register - Read/Write

This register selects the configuration port.

Bits [1:0]: Select configuration entry key

The default value of these bits are determined by RTSB#/PS_CONF_KEY1/RS485 and RTSC/ PS_CONF_KEY0/RS485. **See Table 3 'Configuration Entry Key'**.

- '00' = The entry key is 0x77.
- '01' = The entry key is 0xA0.
- '10' = The entry key is 0x87.
- '11' = The entry key is 0x67.

Bits [3:2]: Reserved

Bit [4]: Select configuration port

The default value of this bit is determined by RTSA#/PS_CONF_2E/RS485 pin. **See Table 2 'Configuration Port Selection'**.

- Logic 0 = The configuration port is 0x2E/0x2F.
- Logic 1 = The configuration port is 0x4E/0x4F.

Bits [7:5]: Reserved

2.1.2 Device Configuration Registers

In order to access Device Configuration Register set, the configuration regsiter access mode has to be enabled. The value in the LDN register determines which device's configuration register set to access.

Example: if LDN register = 0x02, modifying UART Enable Register (0x30) will modify UART Enable Register of channel C.

2.1.2.1 UART Registers

2.1.2.1.1 UART Enable Register (ENABLE) - Read/Write

This register enables/disables the UART selected in the LDN register.

Bit [0]: Enable/Disable UART

The default value of this bit is determined by the strapping options. **See Table 1 'UART Power On Configuration'**. This bit can be programmed after power up.

- Logic 0 = Disable the UART selected in LDN register.
- Logic 1 = Enable the UART selected in LDN register.

Bits [7:1]: Reserved

2.1.2.1.2 Base Address High/Low Register - Read/Write

The V384 provides programmable I/O mapped address feature. Configure the MSB/LSB of 16-bit I/O address, for the UART selected in LDN register, in this register.

Bits [7:0]: MSB of UART base address (0x60)

The default value of this register is determined by the strapping options. **See Table 1 'UART Power On Configuration'**.

The product (or products) mentioned in this data sheet are no longer being manufactured and may not be ordered (OBS)

Bits [7:0]: LSB of UART base address (0x61)

The default value of this register is determined by the strapping options. **See Table 1 'UART Power On Configuration'**.

2.1.2.1.3 IRQ Channel Select Register - Read/Write

The V384 supports different IRQ channels and modes. The IRQ modes and IRQ channel number for each device of V384 should be programmed in their respective IRQ Channel Selelct register. Each device of V384 can have same/different IRQ channel.

Bits [3:0]: Select the IRQ channel

The default values of these bits is determined by the strapping options **See Table 1 'UART Power On Configuration'.** They can also be configured via software after power on.

Bit [4]: Enable/Disable the IRQ Sharing mode

- Logic 0 = Disable the IRQ sharing mode (default). The IRQ channel must be different for each UART for proper behavior.
- Logic 1 = Enable the IRQ sharing mode. The IRQ channel (bits 3-0) can be different or be the same as the other UARTs.

Bits [6:5]: IRQ Sharing mode

These two bits are effective only when IRQ sharing mode is enabled (bit[4] = '1'). The SERIRQ time slot is specified by bits 3-0. An interrupt will only appear on the SERIRQ pin during that time slot if MCR[3] = '1'.

- '00' = The IRQ Sharing mode is active LOW level (default). There will be an active low pulse continuously on the SERIRQ pin until the interrupt has been cleared.
- '01' = The IRQ Sharing mode is active LOW edge. When there is an interrupt, there will be a single active low pulse on the SERIRQ pin.
- '10' = The IRQ Sharing mode is active HIGH level. There will be an active high pulse continuously on the SERIRQ pin until the interrupt has been cleared.
- '11' = Reserved.

Bit [7]: Reserved

2.1.2.1.4 Enhanced Multifunction Register - Read/Write

This register enables/disables the RS-485 mode, 9-bit mode, selects clock frequency and delay in the IR mode.

The product (or products) mentioned in this data sheet are no longer being manufactured and may not be ordered (OBS)

Bits [1:0]: Internal clock frequency

The V384 provides an option to select among various internal clock frequency, which is used to generate different baud values. The value of the internal clock frequency is dependent on external clock provided to the CLKIN pin and setting of **Clock Select Register - Read/Write**. Table 8 describes various possible internal clock frequencies derived from 24MHz/48MHz external clock.

TABLE 8: INTERNAL CLOCK FREQUENCY (MHZ)

BITs[1:0]	EXTERNAL CLOCK = 24MHz		EXTERNAL CLOCK = 48MHz	
	CLKSEL=0x0	CLKSEL=0x1	CLKSEL=0x0	CLKSEL =0x1
00	1.8462	0.9231	3.6923	1.8462
01	18	9	36	18
10	24	12	48	24
11	14	7	28	14

The product (or products) mentioned in this data sheet are no longer being manufactured and may not be ordered (OBS)

See 'Section 1.4.1.1, Programmable Baud Rate Generator'.

Bit [2]: IR mode TX Delay

- Logic 0 = TX transmits data immedately when changing from RX to TX (default).
- Logic 1 = TX delays 4 character time when changing from RX to TX.

Bit [3]: IR mode RX Delay

- Logic 0 = RX is enabled immediately after TX is idle (default).
- Logic 1 = RX is disabled for 4 character time after TX is idle.

Bit [4]: Enable/Disable Auto RS-485 Half-Duplex Control mode

- Logic 0 = Disable the Auto RS-485 Half-Duplex Control mode (default). The RTS#/RS485 pin can be controlled by MCR bit-1.
- Logic 1 = Enable the Auto RS-485 Half-Duplex Control mode. The RTS#/RS485 signal polarity is determined by the bit-5.

Bit [5]: Invert the RTS#/RS485 signal polarity for RS-485 Half-Duplex Control mode

- Logic 0 = RTS#/RS485 signal polarity is HIGH for transmission and LOW for reception (default).
- Logic 1 = RTS#/RS485 signal polarity is inverted (that is, LOW for transmission and HIGH for reception).

Bit [6]: Auto Address Detection

- Logic 0 = All bytes received will be loaded into RX FIFO. **See 'Section 1.4.4, Auto RS-485 Half-Duplex Control'.**
- Logic 1 = All bytes received after address byte that matches the given address or broadcast address (determined by the 9-bit mode slave address register and 9-bit mode slave address mask register) will be loaded into RX FIFO. **See 'Section 1.4.5.1, Auto Address Detection'.**

Bit [7]: Enable/Disable the 9-bit Mode

- Logic 0 = Disable the 9-bit mode (default).
- Logic 1 = Enable the 9-bit mode (multi-drop mode).

In the 9-bit mode, the parity bit becomes the address/data bit.**See 'Section 1.4.5, Normal Multidrop (9-bit) Mode'.**

2.1.2.1.5 Infrared Mode Control Register - Read/Write

The V384 supports IR mode for UART channel A only. It controls infrared mode by setting this register. See 'Section 1.4.6, Infrared Mode'.

Bit [0]: IR mode IRRXA# invert

- Logic 0 = IRRA# idles LOW. (Default)
- Logic 1 = Invert the IRRXA# for IR mode, idle at HIGH.

Bit [1]: IR mode IRTXA# invert

- Logic 0 = IRTXA# idles LOW. (Default)
- Logic 1 = Invert the IRTXA# for IR mode, idle at HIGH.

Bit [2]: IR mode Half-Duplex

- Logic 0 = Enable full duplex function for IR mode.
- Logic 1 = Enable half duplex function for IR mode (default).

Bits [4:3]: IR mode Enable

- '00' or '01' = Disable the IR function (default value is '00').
- '10' = Enable the IR function, active pulse is 1.6 us.
- '11' = Enable the IR function, active pulse is 3/16 bit time.

Bits [7:5]: Reserved

2.1.2.1.6 9-bit Mode Slave Address Register - Read/Write

This register indicates the slave address in 9-bit mode. This register along with the 9-bit mode slave address mask register will determine the given address and broadcast address in 9-bit mode. The V384 will respond to both the given address and the broadcast address.

2.1.2.1.7 9-bit Mode Slave Address Mask Register - Read/Write

This register indicates the slave address mask in 9-bit mode. This register along with the 9-bit mode slave address register will determine the given address and broadcast address in 9-bit mode. The V384 will respond to both the given address and the broadcast address.

- Given address: If bit n of the 9-bit mode slave address mask register is '0', then the corresponding bit of given address is 'do not care'.
- Broadcast address: If bit n of the ORed 9-bit mode slave address register and 9-bit mode slave address mask register is '0', then this bit n is a 'do not care' bit. The remaining bit which is '1' is compared to the received address.

TABLE 9: EXAMPLE

REGISTER	EXAMPLE 1	EXAMPLE 2	EXAMPLE 3	EXAMPLE 4
9-bit mode slave address register (0xF4)	11110100	00001111	01010101	11100111
9-bit mode slave address mask register (0xF5)	01010101	10101010	11111111	00001111
Given address	x1x1x1x0	0x0x1x1x	01010101	xxxx0111
Broadcast address	1111x1x1	1x1x1111	11111111	111x1111

The product (or products) mentioned in this data sheet are no longer being manufactured and may not be ordered (OBS)

2.1.2.1.8 FIFO Mode Select Register - Read/Write

This register selects FIFO depth and receiver trigger levels.

Bits [1:0]: FIFO size for TX/RX

- '00' = FIFO size is 16 bytes.
- '01' = FIFO size is 32 bytes.
- '10' = FIFO size is 64 bytes.
- '11' = FIFO size is 128 bytes.

Bits [3:2]: Reserved

Bits [5:4]: RX trigger level

- '00' = RX trigger level is 1, 4, 8, 14 (**See Table 13 'Receive FIFO Trigger Level Selection'**).
- '01' = RX trigger level is 2, 8, 16, 28 (**See Table 13 'Receive FIFO Trigger Level Selection'**).
- '10' = RX trigger level is 4, 16, 32, 56 (**See Table 13 'Receive FIFO Trigger Level Selection'**).
- '11' = RX trigger level is 8, 32, 64, 112 (**See Table 13 'Receive FIFO Trigger Level Selection'**).

Note: for Bits[5:4]= '01','10' and '11' make sure correct FIFO size is programmed in Bits[1:0].

Bit [6]: Reserved

Bit [7]: TX holding register (THR) empty delay

- Logic 0 = No delay for THR empty interrupt (default).
- Logic 1 = Delay 1 transmission clock for THR empty interrupt.

2.1.2.2 Watchdog Timer Registers (LDN = 0x08)

2.1.2.2.1 WDT Enable Register - Read/Write

Bit [0]: WDT Enable/Disable

- Logic 0 = Disable the Watchdog Timer.
- Logic 1 = Enable the Watchdog Timer.

After power on or reset, if the pin DTRC#/PS_WDT is sampled HIGH, this bit will be set to '1'. Otherwise, this bit will be set to '0'. **See Table 1 'UART Power On Configuration'**.

Bits [7:1]: Reserved

2.1.2.2.2 WDT Base Address High/Low Register - Read/Write

This register indicates the MSB/LSB of watchdog timer base address.

Bits [7:0]: The MSB of watchdog timer base address (0x60).

After power on or reset, if the pin DTRC#/PS_WDT is sampled HIGH, this byte will be set to 0x04. Otherwise, this bit will be set to 0x00. **See Table 1 'UART Power On Configuration'**.

Bits [7:0]: The LSB of watchdog timer base address (0x61) .

After power on or reset, if the pin DTRC#/PS_WDT is sampled HIGH, this byte will be set to 0x42. Otherwise, this byte will be set to 0x0. **See Table 1 'UART Power On Configuration'**.

2.1.2.2.3 WDT IRQ Channel Select Register - Read/Write

This register enables / disables an interrupt request output from the watchdog timer.

The product (or products) mentioned in this data sheet are no longer being manufactured and may not be ordered (OBS)

Bits [3:0]: Select the IRQ channel for watchdog timer

After power on or reset, if the pin DTRC#/PS_WDT is sampled HIGH, this byte will be set to 0x00. Otherwise, this byte will be set to 0x0. See Table 1 'UART Power On Configuration'.

Bit [4]: Enable/Disable the watchdog timer IRQ

- Logic 0 = Disable the watchdog timer IRQ (default).
- Logic 1 = Enable the watchdog timer IRQ.

Bits [7:5]: Reserved

2.1.2.2.4 WDT Timer Status and Control Register - Read/Write

This register sets timer status and control timer events.

Bit [0]: Time Out Events

- Logic 0 = No time out occurred (default).
- Logic 1 = Time out occurred. Write '1' to this bit will clear the status.

Bits [2:1]: WDT Interval

- '00' = Timer unit is 10 ms.
- '01' = Timer unit is 1 second.
- '10' = Timer unit is 1 minute.
- '11' = Reserved.

Bits [7:3]: Reserved

2.1.2.2.5 WDT Count Register - Read/Write

This register programs the count value for watchdog timer.

Bits [7:0]: Sets count value for watchdog timer

Writing a non-zero value to this register once will disable the timer and writing the same value again will enable the timer. After power on or reset, if the pin DTRC#/PS_WDT is sampled HIGH, this byte will be set to 0x0A. Otherwise, this byte will be set to 0x00. See Table 1 'UART Power On Configuration'.

The product (or products) mentioned in this data sheet are no longer being manufactured and may not be ordered. (OBS)

2.2 UART Internal Registers

The UART register set for the V384 is shown in Table 10 and Table 11.

TABLE 10: UART INTERNAL REGISTERS

OFFSET ADDRESSES	REGISTER	RESET STATE	COMMENTS
	16C550 COMPATIBLE REGISTERS		
0x0	DLL - Divisor LSB Register	0x01	LCR[7] = 1
0x1	DLM - Divisor MSB Register	0x00	
0x0	RHR - Receive Holding Register THR - Transmit Holding Register	0xXX 0xXX	LCR[7] = 0
0x1	IER - Interrupt Enable Register	0x00	
0x2	ISR - Interrupt Status Register FCR - FIFO Control Register	0x01 0x00	
0x3	LCR - Line Control Register	0x00	
0x4	MCR - Modem Control Register	0x00	
0x5	LSR - Line Status Register	0x60	
0x6	MSR - Modem Status Register	Bits 3:0 = 0 Bts 7-4 = Logic Levels of the inputs inverted	
0x7	SPR - Scratch Pad Register	0x00	

The product (or products) mentioned in this datasheet are no longer being manufactured and may not be ordered (OBS)

TABLE 11: UART INTERNAL REGISTER

OFFSET ADDRESS	REG NAME	READ/ WRITE	BIT-7	BIT-6	BIT-5	BIT-4	BIT-3	BIT-2	BIT-1	BIT-0	COMMENT
16C550 Compatible Registers											
0x0	RHR	RD	Bit-7	Bit-6	Bit-5	Bit-4	Bit-3	Bit-2	Bit-1	Bit-0	
0x0	THR	WR	Bit-7	Bit-6	Bit-5	Bit-4	Bit-3	Bit-2	Bit-1	Bit-0	
0x1	IER	RD/WR	0	0	0	0	Modem Stat. Int. Enable	RX Line Stat. Int. Enable	TX Empty Int Enable	RX Data Int. Enable	LCR[7] = 0
0x2	ISR	RD	FIFOs Enabled	FIFOs Enabled	0	0	INT Source Bit-3	INT Source Bit-2	INT Source Bit-1	INT Source Bit-0	
0x2	FCR	WR	RX FIFO Trigger	RX FIFO Trigger	0	0	0	TX FIFO Reset	RX FIFO Reset	FIFOs Enable	
0x3	LCR	RD/WR	Divisor Enable	Set TX Break	Set Parity	Even Parity	Parity Enable	Stop Bits	Word Length Bit-1	Word Length Bit-0	
0x4	MCR	RD/WR	0	0	0	Internal Lopback Enable	Enable Interrupts/ OP2#	OP1#	RTS# Output Control	DTR# Output Control	
0x5	LSR	RD	RX FIFO Global Error	THR & TSR Empty	THR Empty	RX Break	RX Fram-ing Error	RX Parity Error	RX Over-run Error	RX Data Ready	
0x6	MSR	RD	CD# Input	RI# Input	DSR# Input	CTS# Input	Delta CD#	Delta RI#	Delta DSR#	Delta CTS#	
0x7	SPR	RD/WR	Bit-7	Bit-6	Bit-5	Bit-4	Bit-3	Bit-2	Bit-1	Bit-0	
Baud Rate Generator Divisor											
0x0	DLL	RD/WR	Bit-7	Bit-6	Bit-5	Bit-4	Bit-3	Bit-2	Bit-1	Bit-0	LCR[7] = 1
0x1	DLM	RD/WR	Bit-7	Bit-6	Bit-5	Bit-4	Bit-3	Bit-2	Bit-1	Bit-0	

The product (or product(s) mentioned in this data sheet are no longer being manufactured and may not be ordered (OBS)

2.2.1 UART Internal Register Descriptions

2.2.1.1 Receive Holding Register (RHR) - Read- Only

SEE"RECEIVER" ON PAGE 12.

2.2.1.2 Transmit Holding Register (THR) - Write-Only

SEE"TRANSMITTER" ON PAGE 11.

2.2.1.3 Interrupt Enable Register (IER) - Read/Write

The Interrupt Enable Register (IER) masks the interrupts from receive data ready, transmit empty, line status and modem status registers. These interrupts are reported in the Interrupt Status Register (ISR).

2.2.1.3.1 IER versus Receive FIFO Interrupt Mode Operation

When the receive FIFO (FCR BIT-0 = 1) and receive interrupts (IER BIT-0 = 1) are enabled, the RHR interrupts (see ISR bits 2 and 3) status will reflect the following:

A. The receive data available interrupts are issued to the host when the FIFO has reached the programmed trigger level. It will be cleared when the FIFO drops below the programmed trigger level.

B. FIFO level will be reflected in the ISR register when the FIFO trigger level is reached. Both the ISR register status bit and the interrupt will be cleared when the FIFO drops below the trigger level.

C. The receive data ready bit (LSR BIT-0) is set as soon as a character is transferred from the shift register to the receive FIFO. It is reset when the FIFO is empty.

2.2.1.3.2 IER versus Receive/Transmit FIFO Polled Mode Operation

When FCR BIT-0 equals a logic 1 for FIFO enable; resetting IER bits 0-3 enables the XR28V384 in the FIFO polled mode of operation. Since the receiver and transmitter have separate bits in the LSR either or both can be used in the polled mode by selecting respective transmit or receive control bit(s).

A. LSR BIT-0 indicates there is data in RHR or RX FIFO.

B. LSR BIT-1 indicates an overrun error has occurred and that data in the FIFO may not be valid.

C. LSR BIT 2-4 provides the type of receive data errors encountered for the data byte in RHR, if any.

D. LSR BIT-5 indicates THR is empty.

E. LSR BIT-6 indicates when both the transmit FIFO and TSR are empty.

F. LSR BIT-7 indicates a data error in at least one character in the RX FIFO.

IER[0]: RHR Interrupt Enable

The receive data ready interrupt will be issued when RHR has a data character in the non-FIFO mode or when the receive FIFO has reached the programmed trigger level in the FIFO mode.

- Logic 0 = Disable the receive data ready interrupt (default).
- Logic 1 = Enable the receiver data ready interrupt.

IER[1]: THR Interrupt Enable

This bit enables the Transmit Ready interrupt which is issued whenever the THR becomes empty. If the THR is empty when this bit is enabled, an interrupt will be generated.

- Logic 0 = Disable Transmit Ready interrupt (default).
- Logic 1 = Enable Transmit Ready interrupt.

IER[2]: Receive Line Status Interrupt Enable

If any of the LSR register bits 1, 2, 3 or 4 is a logic 1, it will generate an interrupt to inform the host controller about the error status of the current data byte in FIFO. LSR bit-1 generates an interrupt immediately when an overrun occurs. LSR bits 2-4 generate an interrupt when the character in the RHR has an error.

- Logic 0 = Disable the receiver line status interrupt (default).
- Logic 1 = Enable the receiver line status interrupt.

IER[3]: Modem Status Interrupt Enable

- Logic 0 = Disable the modem status register interrupt (default).
- Logic 1 = Enable the modem status register interrupt.

IER[7:4]: Reserved

The product (or products) mentioned in this data sheet are no longer being manufactured and may not be ordered (OBS)

2.2.1.4 Interrupt Status Register (ISR) - Read-Only

The UART provides multiple levels of prioritized interrupts to minimize external software interaction. The Interrupt Status Register (ISR) provides the user with six interrupt status bits. Performing a read cycle on the ISR will give the user the current highest pending interrupt level to be serviced, others are queued up to be serviced next. No other interrupts are acknowledged until the pending interrupt is serviced. The Interrupt Source Table, Table 12, shows the data values (bit 0-3) for the interrupt priority levels and the interrupt sources associated with each of these interrupt levels.

2.2.1.4.1 Interrupt Generation:

- LSR is by any of the LSR bits 1, 2, 3 and 4.
- RXRDY Data Ready is by RX trigger level.
- RXRDY Data Time-out is by a 4-char plus 12 bits delay timer.
- TXRDY is by TX FIFO empty.
- MSR is by any of the MSR bits 0, 1, 2 and 3.

2.2.1.4.2 Interrupt Clearing:

- LSR interrupt is cleared by a read to the LSR register.
- RXRDY interrupt is cleared by reading data until FIFO falls below the trigger level.
- RXRDY Time-out interrupt is cleared by reading RHR.
- TXRDY interrupt is cleared by a read to the ISR register or writing to THR.
- MSR interrupt is cleared by a read to the MSR register.

The Product (or Products) mentioned in this data sheet are no longer being manufactured and may not be ordered (OBS)

TABLE 12: INTERRUPT SOURCE AND PRIORITY LEVEL

PRIORITY LEVEL	ISR REGISTER STATUS BITS				SOURCE OF INTERRUPT
	BIT-3	BIT-2	BIT-1	BIT-0	
1	0	1	1	0	LSR (Receiver Line Status Register)
2	1	1	0	0	RXRDY (Receive Data Time-out)
3	0	1	0	0	RXRDY (Received Data Ready)
4	0	0	1	0	TXRDY (Transmit Ready)
5	0	0	0	0	MSR (Modem Status Register)
-	0	0	0	1	None (default)

ISR[0]: Interrupt Status

- Logic 0 = An interrupt is pending and the ISR contents may be used as a pointer to the appropriate interrupt service routine.
- Logic 1 = No interrupt pending (default condition).

ISR[3:1]: Interrupt Status

These bits indicate the source for a pending interrupt at interrupt priority levels (See Interrupt Source Table 12).

ISR[4]: Reserved

ISR[5]: Reserved

ISR[7:6]: FIFO Enable Status

These bits are set to a logic 0 when the FIFOs are disabled. They are set to a logic 1 when the FIFOs are enabled.

2.2.1.5 FIFO Control Register (FCR) - Write-Only

This register is used to enable the FIFOs, clear the FIFOs, and set the receive FIFO trigger levels. The FIFO mode is defined as follows:

FCR[0]: TX and RX FIFO Enable

- Logic 0 = Disable the transmit and receive FIFO (default).
- Logic 1 = Enable the transmit and receive FIFOs. This bit must be set to logic 1 when other FCR bits are written or they will not be programmed. See **FIFO Mode Select Register - Read/Write** bit [1:0] for FIFO size selection.

FCR[1]: RX FIFO Reset

This bit is only active when FCR bit-0 is a '1'.

- Logic 0 = No receive FIFO reset (default).
- Logic 1 = Reset the receive FIFO pointers and FIFO level counter logic (the receive shift register is not cleared or altered). This bit will return to a logic 0 after resetting the FIFO.

FCR[2]: TX FIFO Reset

This bit is only active when FCR bit-0 is a '1'.

- Logic 0 = No transmit FIFO reset (default).
- Logic 1 = Reset the transmit FIFO pointers and FIFO level counter logic (the transmit shift register is not cleared or altered). This bit will return to a logic 0 after resetting the FIFO.

FCR[5:3]: Reserved

The product(or products) mentioned in this data sheet are no longer being manufactured and may not be ordered (OBS)

FCR[7:6]: Receive FIFO Trigger Select

(logic 0 = default, RX trigger level =1).

These 2 bits are used to set the trigger level for the receive FIFO. The UART will issue a receive interrupt when the number of the characters in the FIFO crosses the trigger level. Table 13 shows the complete selections.

TABLE 13: RECEIVE FIFO TRIGGER LEVEL SELECTION

FIFO MODE SELECT REGISTER		FCR BIT-7	FCR BIT-6	RECEIVE TRIGGER LEVEL
BIT-5	BIT-4			
0	0	0	0	1 (default)
		0	1	4
		1	0	8
		1	1	14
0	1	0	0	2
		0	1	8
		1	0	16
		1	1	28
1	0	0	0	4
		0	1	16
		1	0	32
		1	1	56
1	1	0	0	8
		0	1	32
		1	0	64
		1	1	112

The product (or products) mentioned in this data sheet are no longer being manufactured and may not be ordered (OBS)

2.2.1.6 Line Control Register (LCR) - Read/Write

The Line Control Register is used to specify the asynchronous data communication format. The word or character length, the number of stop bits, and the parity are selected by writing the appropriate bits in this register.

LCR[1:0]: TX and RX Word Length Select

These two bits specify the word length to be transmitted or received.

BIT-1	BIT-0	WORD LENGTH
0	0	5 (default)
0	1	6
1	0	7
1	1	8

LCR[2]: TX and RX Stop-bit Length Select

The length of stop bit is specified by this bit in conjunction with the programmed word length.

BIT-2	WORD LENGTH	STOP BIT LENGTH (BIT TIME(S))
0	5,6,7,8	1 (default)
1	5	1-1/2
1	6,7,8	2

LCR[3]: TX and RX Parity Select

Parity or no parity can be selected via this bit. The parity bit is a simple way used in communications for data integrity check. See Table 14 for parity selection summary below.

- Logic 0 = No parity.
- Logic 1 = A parity bit is generated during the transmission while the receiver checks for parity error of the data character received.

LCR[4]: TX and RX Parity Select

If the parity bit is enabled with LCR bit-3 set to a logic 1, LCR BIT-4 selects the even or odd parity format.

- Logic 0 = ODD Parity is generated by forcing an odd number of logic 1's in the transmitted character. The receiver must be programmed to check the same format (default).
- Logic 1 = EVEN Parity is generated by forcing an even number of logic 1's in the transmitted character. The receiver must be programmed to check the same format.

LCR[5]: TX and RX Parity Select

If the parity bit is enabled, LCR BIT-5 selects the forced parity format.

- LCR BIT-5 = logic 0, parity is not forced (default).
- LCR BIT-5 = logic 1 and LCR BIT-4 = logic 0, parity bit is forced to HIGH for the transmit and receive data.
- LCR BIT-5 = logic 1 and LCR BIT-4 = logic 1, parity bit is forced to LOW for the transmit and receive data.

TABLE 14: PARITY SELECTION

LCR BIT-5	LCR BIT-4	LCR BIT-3	PARITY SELECTION
X	X	0	No parity
0	0	1	Odd parity
0	1	1	Even parity
1	0	1	Force parity to mark, HIGH
1	1	1	Forced parity to space, LOW

LCR[6]: Transmit Break Enable

When enabled, the Break control bit causes a break condition to be transmitted (the TX output is forced to a "space', logic 0, state). This condition remains, until disabled by setting LCR bit-6 to a logic 0.

- Logic 0 = No TX break condition. (default).
- Logic 1 = Forces the transmitter output (TX) to a "space", logic 0, for alerting the remote receiver of a line break condition.

The product (or products) mentioned in this data sheet are no longer being manufactured and may not be ordered (OBS)

LCR[7]: Baud Rate Divisors Enable

Baud rate generator divisor (DLL/DLM) enable.

- Logic 0 = Data registers are selected (default).
- Logic 1 = Divisor latch registers are selected.

2.2.1.7 Modem Control Register (MCR) or General Purpose Outputs Control - Read/Write

The MCR register is used for controlling the serial/modem interface signals or general purpose inputs/outputs.

MCR[0]: DTR# Output

The DTR# pin is a modem control output. If the modem interface is not used, this output may be used as a general purpose output.

- Logic 0 = Force DTR# output HIGH (default).
- Logic 1 = Force DTR# output LOW.

MCR[1]: RTS# Output

The RTS# pin is a modem control output. If the modem interface is not used, this output may be used as a general purpose output.

- Logic 0 = Force RTS# output HIGH (default).
- Logic 1 = Force RTS# output LOW.

MCR[2]: Reserved

OP1# is not available as an output pin on the V384. But it is available for use during Internal Loopback Mode. In the Loopback Mode, this bit is used to write the state of the modem RI# interface signal.

MCR[3]: Enable interrupts on SERIRQ / OP2#

Enable or disable Interrupt outputs.

- Logic 0 = Interrupts will not appear on SERIRQ pin.
- Logic 1 = If enabled in IER, interrupting condition will appear on SERIRQ pin.

In internal loopback mode (MCR[4] = '1'), this bit controls the OP2# signal. **See 'Section 1.4.7, Internal Loopback'.**

MCR[4]: Internal Loopback Enable

- Logic 0 = Disable loopback mode (default).
- Logic 1 = Enable local loopback mode, see loopback section and **Figure 8**.

MCR[7:5]: Reserved

2.2.1.8 Line Status Register (LSR) - Read-Only

The LSR provides the status of data transfers between the UART and the host. If IER bit-2 is enabled, LSR bit-1 will generate an interrupt immediately and LSR bits 2-4 will generate an interrupt when a character with an error is in the RHR.

LSR[0]: Receive Data Ready Indicator

- Logic 0 = No data in receive holding register or FIFO (default).
- Logic 1 = Data has been received and is saved in the receive holding register or FIFO.

The product(or products) mentioned in this data sheet are no longer being manufactured and may not be ordered (OBS)

LSR[1]: Receiver Overrun Flag

- Logic 0 = No overrun error (default).
- Logic 1 = Overrun error. A data overrun error condition occurred in the receive shift register. This happens when additional data arrives while the FIFO is full. In this case the previous data in the receive shift register is overwritten. Note that under this condition the data byte in the receive shift register is not transferred into the FIFO, therefore the data in the FIFO is not corrupted by the error.

LSR[2]: Receive Data Parity Error Tag

- Logic 0 = No parity error (default).
- Logic 1 = Parity error. The receive character in RHR does not have correct parity information and is suspect. This error is associated with the character available for reading in RHR.

LSR[3]: Receive Data Framing Error Tag

- Logic 0 = No framing error (default).
- Logic 1 = Framing error. The receive character did not have a valid stop bit(s). This error is associated with the character available for reading in RHR.

LSR[4]: Receive Break Tag

- Logic 0 = No break condition (default).
- Logic 1 = The receiver received a break signal (RX was LOW for at least one character frame time). In the FIFO mode, only one break character is loaded into the FIFO. The break indication remains until the RX input returns to the idle condition, “mark” or HIGH.

LSR[5]: Transmit Holding Register Empty Flag

This bit is the Transmit Holding Register Empty indicator. The THR bit is set to a logic 1 when the last data byte is transferred from the transmit holding register to the transmit shift register. The bit is reset to logic 0 concurrently with the data loading to the transmit holding register by the host. In the FIFO mode this bit is set when the transmit FIFO is empty, it is cleared when the transmit FIFO contains at least 1 byte.

LSR[6]: THR and TSR Empty Flag

This bit is set to a logic 1 whenever the transmitter goes idle. It is set to logic 0 whenever either the THR or TSR contains a data character. In the FIFO mode this bit is set to a logic 1 whenever the transmit FIFO and transmit shift register are both empty.

LSR[7]: Receive FIFO Data Error Flag

- Logic 0 = No FIFO error (default).
- Logic 1 = A global indicator for the sum of all error bits in the RX FIFO. At least one parity error, framing error or break indication is in the FIFO data. This bit clears when there is no more error(s) in any of the bytes in the RX FIFO.

2.2.1.9 Modem Status Register (MSR) - Read-Only

The MSR provides the current state of the modem interface input signals. Lower four bits of this register are used to indicate the modified information. These bits are set to a logic 1 whenever a signal from the modem changes state. These bits may be used for general purpose inputs when they are not used with modem signals.

MSR[0]: Delta CTS# Input Flag

- Logic 0 = No change on CTS# input (default).
- Logic 1 = The CTS# input has changed state since the last time it was monitored. A modem status interrupt will be generated if MSR interrupt is enabled (IER bit-3).

The product (or products) mentioned in this datasheet are no longer being manufactured and may not be ordered (OBS)

MSR[1]: Delta DSR# Input Flag

- Logic 0 = No change on DSR# input (default).
- Logic 1 = The DSR# input has changed state since the last time it was monitored. A modem status interrupt will be generated if MSR interrupt is enabled (IER bit-3).

MSR[2]: Delta RI# Input Flag

- Logic 0 = No change on RI# input (default).
- Logic 1 = The RI# input has changed from LOW to HIGH, ending of the ringing signal. A modem status interrupt will be generated if MSR interrupt is enabled (IER bit-3).

MSR[3]: Delta CD# Input Flag

- Logic 0 = No change on CD# input (default).
- Logic 1 = Indicates that the CD# input has changed state since the last time it was monitored. A modem status interrupt will be generated if MSR interrupt is enabled (IER bit-3).

MSR[4]: CTS Input Status

Normally MSR bit-4 bit is the compliment of the CTS# input. However in the loopback mode, this bit is equivalent to the RTS# bit in the MCR register. The CTS# input may be used as a general purpose input when the modem interface is not used.

MSR[5]: DSR Input Status

Normally this bit is the complement of the DSR# input. In the loopback mode, this bit is equivalent to the DTR# bit in the MCR register. The DSR# input may be used as a general purpose input when the modem interface is not used.

MSR[6]: RI Input Status

Normally this bit is the complement of the RI# input. In the loopback mode this bit is equivalent to bit-2 in the MCR register. The RI# input may be used as a general purpose input when the modem interface is not used.

MSR[7]: CD Input Status

Normally this bit is the complement of the CD# input. In the loopback mode this bit is equivalent to bit-3 in the MCR register. The CD# input may be used as a general purpose input when the modem interface is not used.

2.2.1.10 Scratch Pad Register (SPR) - Read/Write

This is a 8-bit general purpose register for the user to store temporary data.

2.2.1.11 Baud Rate Generator Registers (DLL and DLM) - Read/Write

These registers make-up the value of the baud rate divisor. The concatenation of the contents of DLM and DLL gives the 16-bit divisor value.

The product (or products) mentioned in this data sheet are no longer being manufactured and may not be ordered (OBS)

ABSOLUTE MAXIMUM RATINGS

Power Supply Range	4 Volts
Voltage at Any Pin	6 V
Operating Temperature	-40° to +85°C
Storage Temperature	-65° to +150°C
Package Dissipation	500 mW

ELECTRICAL CHARACTERISTICS

DC ELECTRICAL CHARACTERISTICS

UNLESS OTHERWISE NOTED: T_A = -40 TO +85°C, V_{CC} IS 3.3V ± 10%

SYMBOL	PARAMETER	LIMITS 3.3V MIN	LIMITS 3.3V MAX	UNITS	CONDITIONS
V_{IL}	Input Low Voltage	-0.5	0.8	V	
V_{IH}	Input High Voltage	2.0	5.5	V	
V_{OL}	Output Low Voltage		0.4	V	I_{OL} = 16 mA SERIRQ, LAD[3:0]
V_{OH}	Output High Voltage	2.4		V	I_{OH} = -16 mA SERIRQ, LAD[3:0]
V_{OL}	Output Low Voltage		0.4	V	I_{OL} = 12 mA WDTOUT#
V_{OL}	Output Low Voltage		0.4	V	I_{OL} = 8 mA All other ouputs
V_{OH}	Output High Voltage	2.4		V	I_{OH} = -8 mA All other ouputs
I_{IL}	Input Low Leakage Current		-10	uA	Pins without internal pull-up resistor.
I_{IH}	Input High Leakage Current		10	uA	
I_{IL}	Input Low Leakage Current		-110	uA	Pins with internal pull-up resistor.
I_{IH}	Input High Leakage Current		60	uA	
C_{IN}	Input Pin Capacitance		10	pF	
I_{CC}	Power Supply Current		17	mA	
R_{INT}	Internal pull-up resistor	37	110	kΩ	

The Product (or products) mentioned in this data sheet are no longer being manufactured and may not be ordered (OBS)

AC ELECTRICAL CHARACTERISTICS

UNLESS OTHERWISE NOTED: T_A = -40 TO +85°C, V_{CC} IS 3.3V ± 10%

SYMBOL	PARAMETER	LIMITS 3.3V ± 10% MIN	LIMITS 3.3V ± 10% MAX	UNIT	NOTES
-	External Clock		48	MHz	CLKIN

FIGURE 11. LPC TIMING DIAGRAM

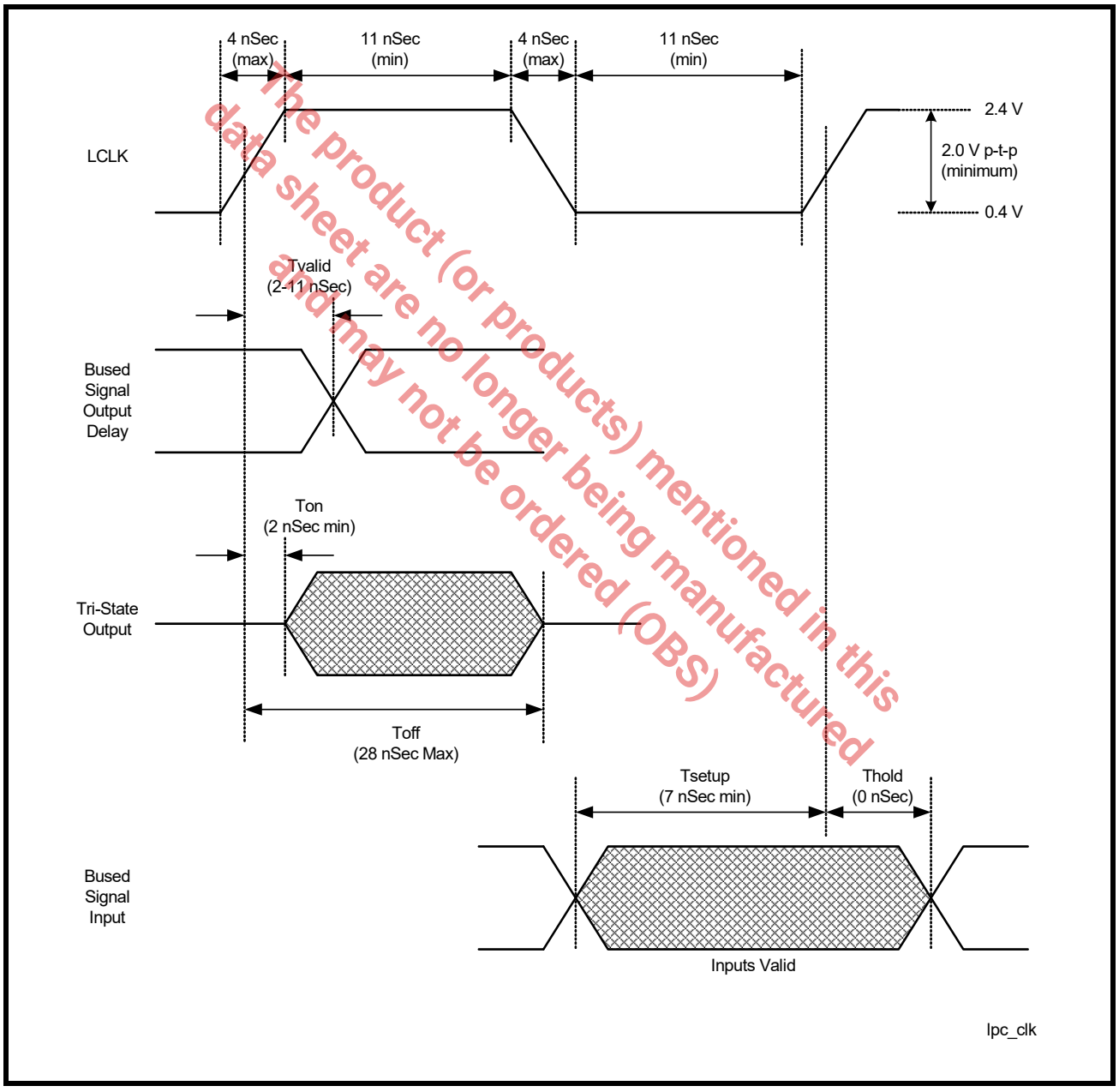

The product (or products) mentioned in this data sheet are no longer being manufactured and may not be ordered (OBS)

MECHANICAL DIMENSIONS

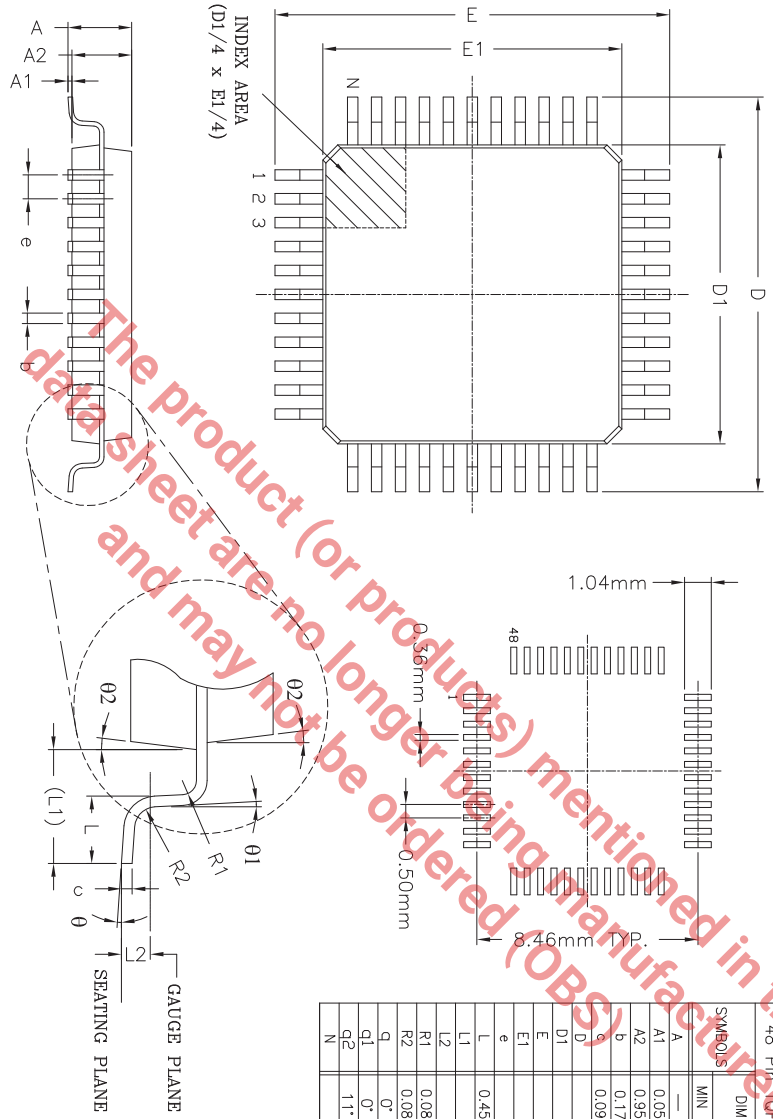

RECOMMENDED PCB LAND PATTERN

FOR REFERENCE ONLY

48 Pin TQFP JEDEC MS-026 Variation ABC

SYMBOLS	DIMENSIONS IN MM (Control Unit)			DIMENSIONS IN INCH (Reference Unit)		
	MIN	NOM	MAX	MIN	NOM	MAX
A	—	—	1.20	—	—	0.047
A1	0.05	—	0.15	0.002	—	0.006
A2	0.95	1.00	1.05	0.037	0.039	0.041
b	0.17	0.22	0.27	0.007	0.009	0.011
c	0.09	—	0.20	0.004	—	0.008
D		9.00 BSC			0.354 BSC	
D1		7.00 BSC			0.276 BSC	
E		9.00 BSC			0.354 BSC	
E1		7.00 BSC			0.276 BSC	
e		0.50 BSC			0.020 BSC	
L	0.45	0.60	0.75	0.018	0.024	0.030
L1		1.00 REF			0.039 REF	
L2		0.25 BSC			0.010 BSC	
R1	0.08	—	0.20	0.003	—	0.008
R2	0.08	—	0.20	0.003	—	0.008
q	0°	3.5°	7°	0°	3.5°	7°
q1	0°	—	—	0°	—	—
q2	11°	12°	13°	11°	12°	13°
N		48			48	

Drawing No: POD-00000038
Revision: A

The product (or products) mentioned in this data sheet are no longer being manufactured and may not be ordered (OBS).

Note: *TQFP48* θ_{JA} = *64.1 °C/W,* θ_{JC} = *6.5 °C/W. All values are typical.*

REVISION HISTORY

DATE	REVISION	DESCRIPTION
November 2013	1.0.0	Released Datasheet
December 2013	1.0.1	Updated Package Drawing
March 2018	1.0.2	Updated to MaxLinear logo. Updated format and Ordering Information.

The product (or products) mentioned in this data sheet are no longer being manufactured and may not be ordered (OBS)

MAXLINEAR

Corporate Headquarters:
5966 La Place Court
Suite 100
Carlsbad, CA 92008
Tel.:+1 (760) 692-0711
Fax: +1 (760) 444-8598
www.maxlinear.com

High Performance Analog:
1060 Rincon Circle
San Jose, CA 95131
Tel.: +1 (669) 265-6100
Fax: +1 (669) 265-6101
Email: uarttechsupport@exar.com
www.exar.com

The content of this document is furnished for informational use only, is subject to change without notice, and should not be construed as a commitment by MaxLinear, Inc.. MaxLinear, Inc. assumes no responsibility or liability for any errors or inaccuracies that may appear in the informational content contained ion this guide. Complying with all applicable copyright laws is the responsibility of the user.. Without limiting the rights under copyright, no part of this document may be reproduced into, stored in, or introduced into a retrieval system, or transmitted in any form or by any means (electronic, mechanical, photocopying, recording, or otherwise), or for any purpose, without the express written permission of MaxLinear, Inc.

MaxLinear, Inc. does not recommend the use of any of its products in life support applications where the failure or malfunction of the product can reasonably be expected to cause failure of the life support system or to significantly affect its safety or effectiveness. Products are not authorized for use in such applications unless MaxLinear, Inc. receives, in writing, assurances to its satisfaction that: (a) the risk of injury or damage has been minimized; (b) the user assumes all such risks; (c) potential liability of MaxLinear, Inc. is adequately protected under the circumstances.

MaxLinear, Inc. may have patents, patent applications, trademarks, copyrights, or other intellectual property rights covering subject matter in this document. Except as expressly provided in any written license agreement from MaxLinear, Inc., the furnishing of this document does not give you any license to these patents, trademarks, coprights, or other intellectual property.

Company and product names may be registered trademarks or trademarks of the respective owners with which they are associated.

© 2013 - 2018 MaxLinear, Inc. All rights reserved.