XR22404

USB 2.0 4-Port Hub

Description

The XR22404 is a USB 2.0 4-port hub with a Single Transaction Translator (STT). It may be configured for downstream device charging and is compatible with Battery Charging specification revision 1.1/1.2.

The upstream USB interface has an integrated USB 2.0 PHY and device controller that is compliant with both hi-speed (480Mbps) and full-speed (12Mbps) and downstream PHY supporting hi-speed, full-speed and low-speed (1.5Mbps) on each of the 4 downstream ports.

The XR22404 provides ganged power control and global overcurrent sensing for the downstream ports.

The XR22404 may be operated from either 5V or 3.3V. If powered from 5V internal regulators provide 3.3V and 1.8V used internally by the device. Port activity and overall hub activity indicators provide status outputs for external LEDs. An external I²C EEPROM may be used with the XR22404 to configure USB device descriptors.

FEATURES

- USB 2.0 compliant interface
- Compatible with Battery Charging specification revision 1.1/1.2
- LED indicators for port, hub or charging activity
- Ganged port power enable
- Global overcurrent sensing
- Single 5V or 3.3V power supply
- Single 12MHz Crystal

APPLICATIONS

- USB port expansion
- Docking stations
- POS terminals
- Factory automation and process controls
- Industrial applications

The product (or products) mentioned in this data sheet are no longer being manufactured and may not be ordered (OBS)

Typical Application

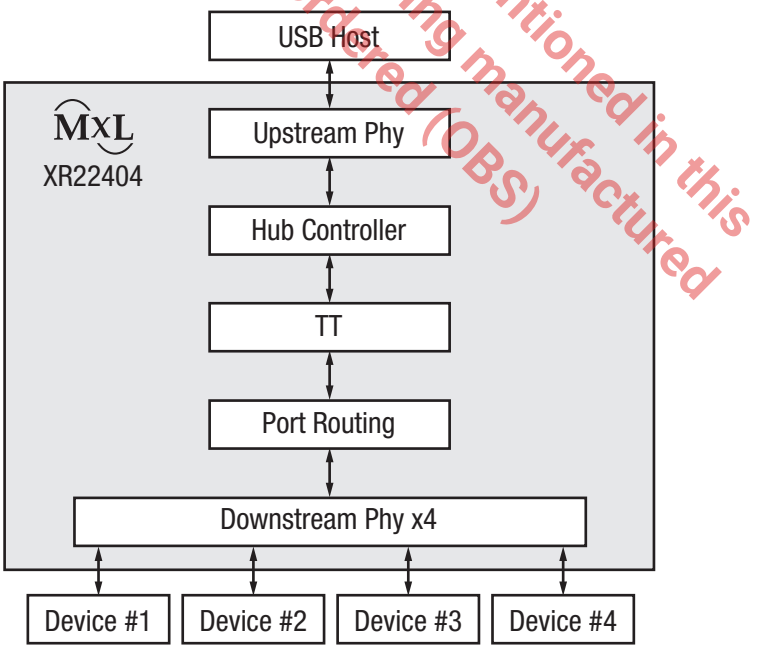

Figure 1. Typical Application

Absolute Maximum Ratings

Stresses beyond the limits listed below may cause permanent damage to the device. Exposure to any Absolute Maximum Rating condition for extended periods may affect device reliability and lifetime.

VCC5 supply voltage ..... -0.5V to 6V

VCC33 supply voltage ..... -0.5V to 4V

Input voltage

(all pins except USBD+, USBD–) ..... -0.3V to 5.5V

Input voltage (USBD+ and USBD–) ..... -0.3V to 5.75V

Junction temperature ..... 125°C

Operating Conditions

Operating temperature range ..... 0°C to 70°C

VCC5 supply voltage .....4.4V to 5.5V

VCC33 supply voltage .....3.0V to 3.6V

The product (or products) mentioned in this data sheet are no longer being manufactured and may not be ordered (OBS)

Electrical Characteristics

Unless otherwise noted: T_A = 0°C to 70°C, V_{CC} = 4.4V to 5.5V.

Symbol	Conditions			Min	Typ	Max	Units
	Upstream Port Speed	Number of Active Downstream Ports	Downstream Ports Device Speed				
Power Consumption DC Supply Current (V_{CC} = VCC5)							
I_{CC}	High Speed	Suspend			1.2	2.5	mA
		None			44		mA
		1	1x Full Speed		55		mA
			1x High Speed		56		mA
		2	2x Full Speed		59		mA
			1x Full Speed, 1x High Speed		68		mA
			2x High Speed		74		mA
		4	4x Full Speed		70		mA
			4x High Speed		100		mA
	Full Speed	Suspend			1.2	2.5	mA
		None			30		mA
		1	1x Full Speed		35		mA
		4	4x Full Speed		55		mA

Symbol	Conditions			Min	Typ	Max	Units
	Upstream Port Speed	Number of Active Downstream Ports	Downstream Ports Device Speed				
Power Consumption DC Supply Current (V_{CC} = VCC33)							
I_{CC}	High Speed	Suspend			1.1	2.5	mA
		None			42		mA
		1	1x Full Speed		50		mA
			1x High Speed		54		mA
		2	2x Full Speed		58		mA
			1x Full Speed, 1x High Speed		61		mA
			2x High Speed		72		mA
		4	4x Full Speed		68		mA
			4x High Speed		97		mA
	Full Speed	Suspend			1.1	2.5	mA
		None			29		mA
		1	1x Full Speed		34		mA
		4	4x Full Speed		53		mA

The product (or products) mentioned in this data sheet are no longer being manufactured and may not be ordered (OBS)

Electrical Characteristics (Continued)

Unless otherwise noted: T_A = 0°C to 70°C, V_{CC} = 4.4V to 5.5V.

Symbol	Parameter	Conditions	Min	Typ	Max	Units
Non-USB I/O Pins						
V_{IL}	Input low voltage		-0.3		0.8	V
V_{IH}	Input high voltage		2.0		5.5	V
V_{OL}	Output low voltage	I_{OL} = 4 mA			0.4	V
V_{OH}	Output high voltage	I_{OL} = -4 mA	2.4			V
I_{IL}	Input low leakage current				±10	µA
I_{IH}	Input high leakage current				±10	µA
C_{IN}	Input pin capacitance				5	pF
USB I/O Pins(1)						
3.3V Regulated Power Output (when VCC5 is connected to 5V input)						
VCC33	Output voltage	Max load current 100 mA	3.0	3.3	3.6	V

NOTE:
1. See USB 2.0 Specification for USB I/O pins DC Electrical Characteristics.

The product(or products) mentioned in this data sheet are no longer being manufactured and may not be ordered (OBS)

Pin Configuration, Top View

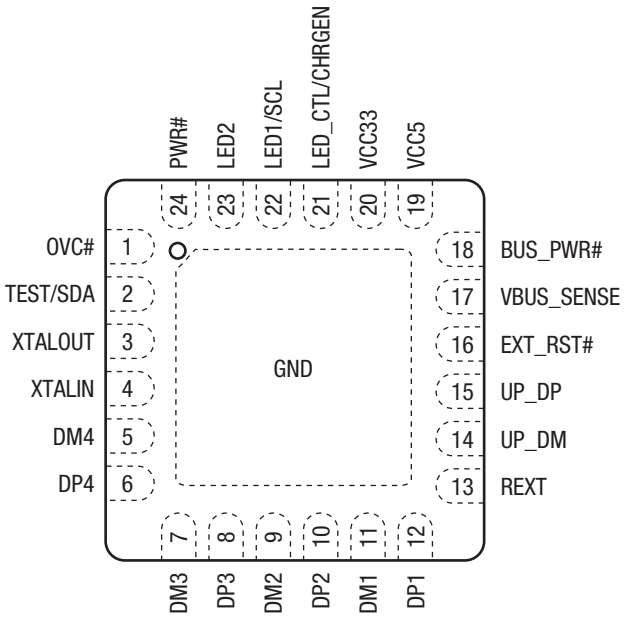

24-Pin TQFN

NOTE:
Center Pad must be connected to digital ground on PCB.

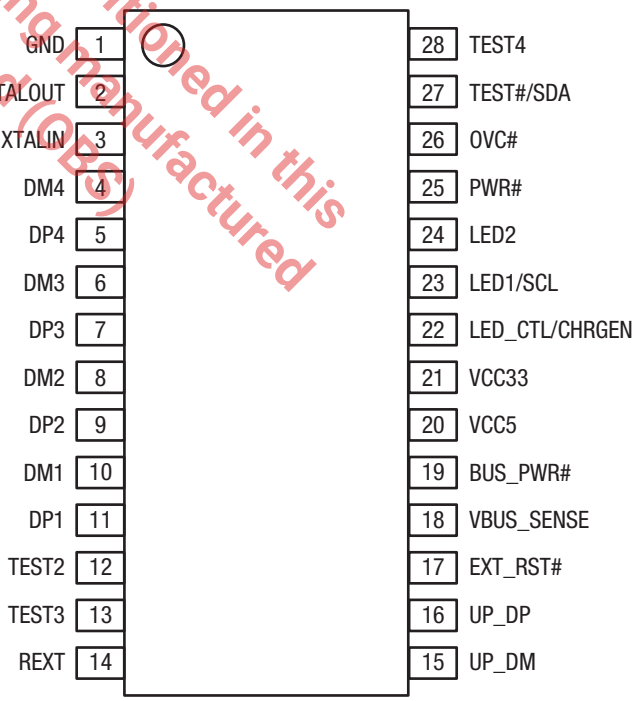

28-Pin SSOP

Pin Functions

TQFN-24 Pin Number	SSOP-28 Pin Number	Pin Name	Type	Description
Center Pad	1	GND	PWR	Digital ground (in TQFN package Center Pad must be connected to digital ground).
3	2	XTALOUT	O	12 MHz crystal feedback output.
4	3	XTALIN	I	12 MHz ± 50 ppm crystal input with load capacitance rating of 16-20 pF. An external 3.3V clock may be used instead on XTALIN, leaving XTALOUT unconnected.
5	4	DM4	I/O	Downstream port 4 USB D- data.
6	5	DP4	I/O	Downstream port 4 USB D+ data.
7	6	DM3	I/O	Downstream port 3 USB D- data.
8	7	DP3	I/O	Downstream port 3 USB D+ data.
9	8	DM2	I/O	Downstream port 2 USB D- data.
10	9	DP2	I/O	Downstream port 2 USB D+ data.
11	10	DM1	I/O	Downstream port 1 USB D- data.
12	11	DP1	I/O	Downstream port 1 USB D+ data.
-	12	TEST2	-	Leave unconnected for normal operation.
-	13	TEST3	-	Leave unconnected for normal operation.
13	14	REXT	I	External bias resistor. Connect 2.7kΩ 1% resistor from this pin to GND.
14	15	UP_DM	I/O	Upstream port USB D- data.
15	16	UP_DP	I/O	Upstream port USB D+ data.
16	17	EXT_RST#	I	External reset input, active low. Must be asserted for a minimum of 10 µS.
17	18	VBUS_SENSE	I	Active high. Indicates connection to USB host. Connect to VBUS power input from USB host through series 10kΩ registor. A 100kΩ pull-down registor and 100nF shunt capacitance are required on this pin.
18	19	BUS_PWR#	I	Bus power indicator, active low. For bus powered mode, connect to ground. For self-powered mode, connect to logic '1'.
19	20	VCC5	PWR	5V power to internal 5V to 3.3V regulator, unused when device is powered by 3.3V.
20	21	VCC33	PWR	3.3V power input, when device is powered by 3.3V. If device is powered by 5V to VCC5 pin, decouple this pin with 4.7 µF.
21	22	LED_CTL/ CHRGEN	I/O	LED hub active indicator or downstream port charge enable, active high. May also be used in conjunction with port status LEDs. If sampled high during power up reset, all downstream ports may be used as charging ports. Refer to Table 1.
22	23	LED1/SCL	I/O	Port 1 LED indicator or I²C clock for external EEPROM. Max source current 3 mA. May be used in conjunction with LED_CTL/CHRGEN pin.
23	24	LED2	I/O	Port 2 LED indicator. Max source current 3 mA. May be used in conjunction with DRV pin. Refer to Figure 3.
24	25	PWR#	O	Power enable for all downstream devices. Asserted when XR22404 device is configured and OVC# is not asserted. Deasserted (high) if OVC# input is asserted or XR22404 is not configured.
1	26	OVC#	I	Downstream port global overcurrent indicator, active low.
2	27	TEST#/SDA	I	Test mode enable, active low or I²C serial data for external EEPROM. Tie to logic '1' for normal device operation or connect to serial data of I²C EEPROM.
-	28	TEST4	-	Leave unconnected for normal operation.

NOTE:
Type: I = Input, O = Output, I/O = Input/Output, PWR = Power, OD = Open-Drain.

The product(s) mentioned in this data sheet are no longer being manufactured and may not be ordered (OBS)

Functional Block Diagram

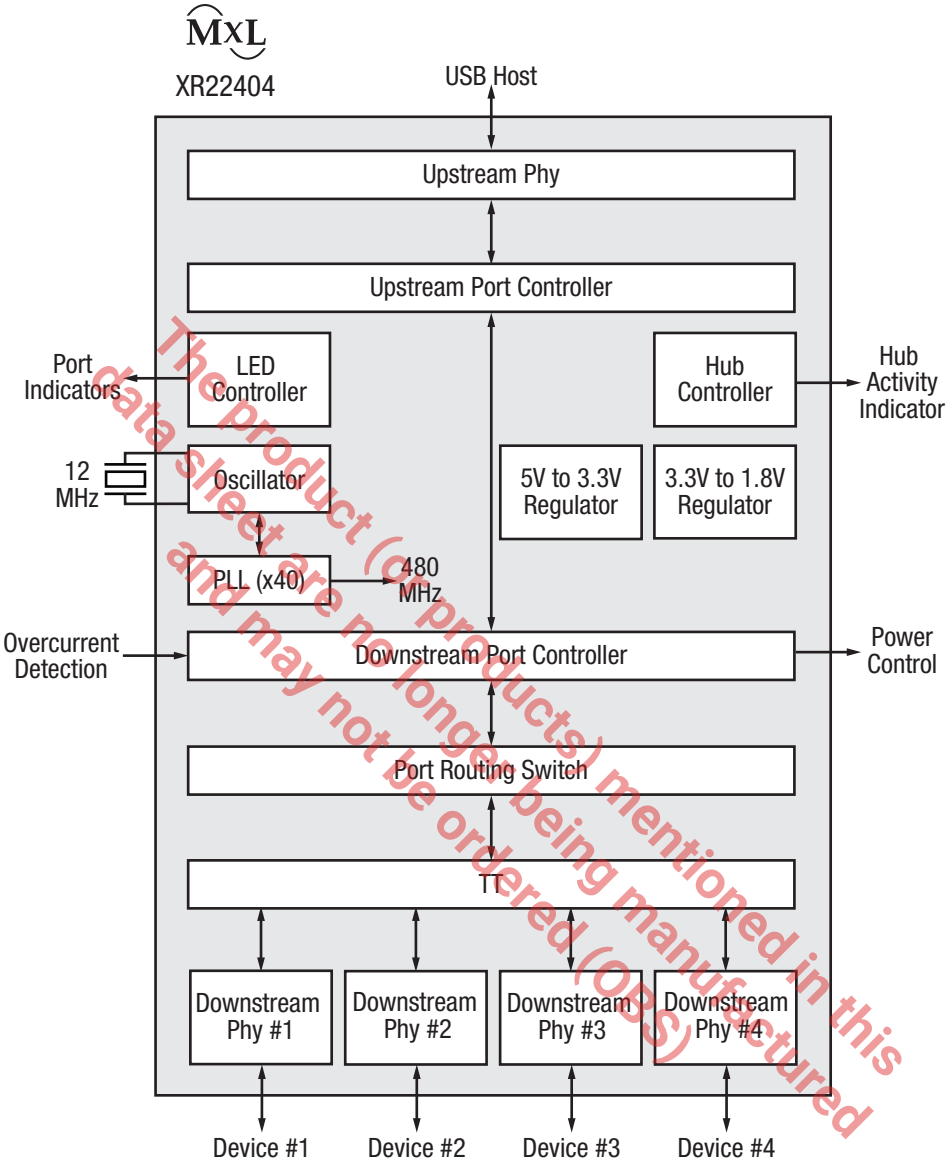

The product (or products) mentioned in this data sheet are no longer being manufactured and may not be ordered (OBS)

Figure 2. Functional Block Diagram

Applications Information

Functional Description

The XR22404 hub has a single transaction translator that allows the USB 2.0 hub to take incoming high speed packets from the USB host on the upstream port and translate these commands if necessary, to full or low speed commands on any of the 4 downstream ports. Additionally, the XR22404 can provide battery charging on all four downstream ports compatible with the USB Battery Charging Specification revision 1.1/1.2.

USB Interface

The hub function of the XR22404 supports one configuration and utilizes the following USB endpoints:

- Control endpoint
- Status change endpoint

The XR22404 hub may be configured for bus powered mode with a maximum power of 500 mA or self-powered mode by connecting the BUS_PWR# pin to the appropriate logic state. In bus powered mode, downstream ports are limited to low power (100 mA or less). When self-powered, downstream devices can draw up to 500 mA on each of the four ports.

USB Vendor ID

Exar's USB vendor ID is 0x04E2.

USB Product ID

Exar's USB hub product ID is 0x0404.

Device Reset

The XR22404 has both an automatic power-up reset and an external hardware pin reset. Normal hub operation or charging mode is sampled on the LED_CTL/CHRGEN pin at device reset. Refer to Table 1 for further description of charging modes.

USB Suspend

All USB peripheral devices must support the USB suspend mode. Per USB standard, the XR22404 device will begin to enter the suspend state if it does not detect any activity (including Start of Frame or SOF packets) on its USB data lines for 3 ms. In bus powered mode the peripheral device must then reduce power consumption from VBUS power within the next 7 ms to the allowed limit of 2.5 mA for the suspended state. Note that in this context, the "device" is all circuitry (including the XR22404) that draws power from the host VBUS. Each attached downstream port is also allowed an additional 2.5 mA of suspend current. If no devices are connected to the XR22404 downstream ports, the USB host will suspend the hub.

Ganged Power Control and Global Overcurrent Sensing

The OVC# pin is used as a global overcurrent protection input for current sensing. The PWR# pin will be asserted whenever the OVC# input pin is asserted or the XR22404 device is not yet configured.

The product (or product(s) mentioned in this data sheet are no longer being manufactured and may not be ordered (OBS)

Applications Information (Continued)

Battery Charging

The XR22404 will provide downstream charging irrespective of its state, i.e., enumerated, detached, operational, or suspended as long as it is powered by an external source, i.e., self-powered. In bus powered mode, VBUS power is not capable of providing sufficient power for the XR22404 to charge downstream devices.

If the XR22404 device is self-powered and LED_CTL/CHRGEN pin is tied to a logic '1' during power up or external reset, the XR22404 battery charging function will be enabled on all downstream ports. If the device is self-powered and connected to an upstream USB host, the XR22404 will function as a Charging Downstream Port (CDP). If the device is self-powered but not connected to a USB host, the XR22404 will function as a Dedicated Charging Port (DCP). Refer to Table 1.

Table 1. Downstream Port Capability

CHRGEN	VBUS_SENSE	BUS_PWR#	Capability
Logic '1'	Logic '1'	Logic '1'	CDP - Connected to upstream USB host, downstream ports may be used in normal hub operation or for charging.
Logic '1'	Logic '0'	Logic '1'	DCP - Not connected to upstream USB host, all downstream ports may be used for charging.
"X"	Logic '1'	Logic '0'	SDP - Bus power is not capable of providing enough power for battery charging capability, downstream ports used in normal hub operation.
Logic '0'	Logic '1'	"X"	SDP - Normal hub operation.

The product (or products) mentioned in this data sheet are no longer being manufactured and may not be ordered (OBS)

USB Hub Drivers

All Operating Systems provide a native USB hub device driver required for the XR22404 device to operate. No other device drivers are necessary for the XR22404.

Regulated 3.3V Power Output

The XR22404 internal voltage regulator provides 3.3 VDC output power from 5V input, which can be utilized by other circuitry. Refer to Electrical Characteristics on page 2 for maximum power capability.

Applications Information (Continued)

External EEPROM

An external I²C EEPROM may be used with the XR22404 to configure USB device descriptors and the number of downstream ports. The contents of the EEPROM are described in Table 2. In order for contents of the EEPROM to be used by the XR22404, both the EEPROM check values at address 0x00, 0x01 and the checksum at address 0x1F must be correct. If either field is incorrect or reserved fields are not set to 0x00, the EEPROM contents will be ignored and the device will use the default descriptor values.

Table 2. EEPROM Contents

Address	Content	Description
0x00	0x40	EEPROM check value.
0x01	0x1A	EEPROM check value.
0x02	Vendor ID, LSB	idVendor field LSB of device descriptor.
0x03	Vendor ID, MSB	idVendor field MSB of device descriptor.
0x04	Product ID, LSB	idProduct field LSB of device descriptor.
0x05	Product ID, MSB	idProduct field MSB of device descriptor.
0x06	Device Release, LSB	bcdDevice field LSB of device descriptor in binary coded decimal format.
0x07	Device Release, MSB	bcdDevice field MSB of device descriptor in binary coded decimal format.
0x08 to 0x19	Reserved	Must be 0x00.
0x1A	Downstream Ports	Number of downstream ports in the bNbrPorts field of the hub descriptor.
0x1B to 0x1E	Reserved	Must be 0x00.
0x1F	Checksum	Bitwise checksum of EEPROM values from address 0x00 to 0x1E.

The product (or products) mentioned in this data sheet are no longer being manufactured and may not be ordered (OBS)

Applications Information (Continued)

LED Indicators

LED indicators in the XR22404 may be used for downstream port and hub activity indicators or as a downstream charging indicator. Figure 3 demonstrates individual and hub activity indicators. Figure 4 demonstrates a joint port activity along with hub activity indicators.

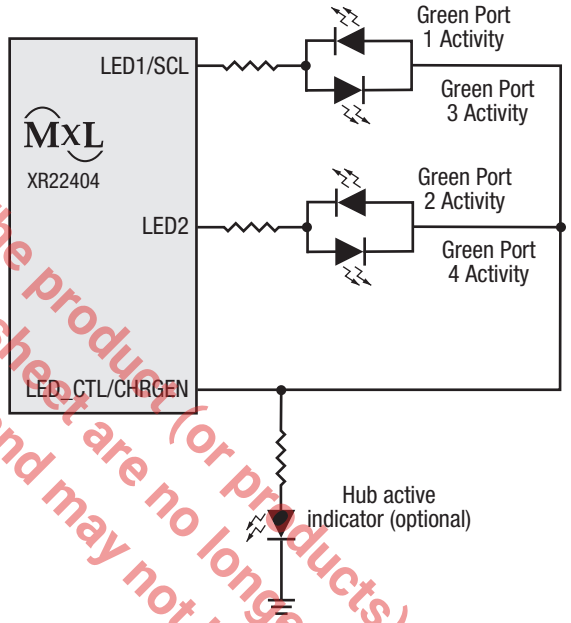

Figure 3. Port and Hub Activity Indicators

The product (or products) mentioned in this data sheet are no longer being manufactured and may not be ordered (OBS)

Applications Information (Continued)

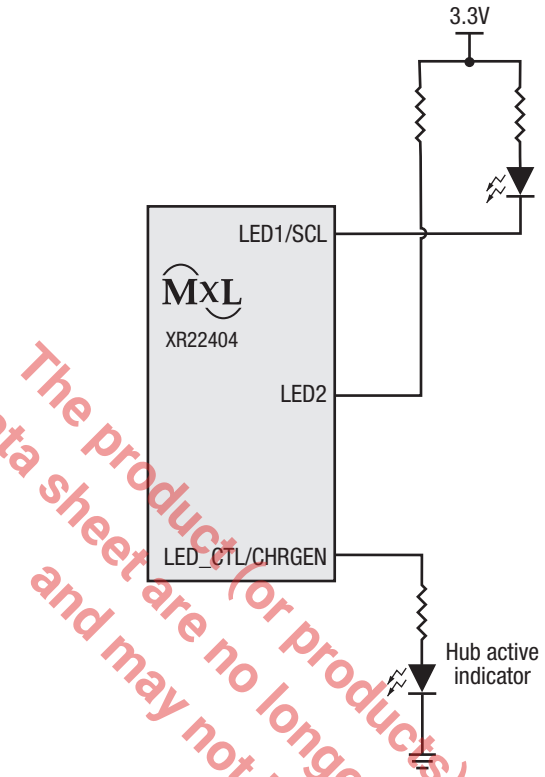

Figure 4. Joint Port and Hub Activity Indicators

The product (or products) mentioned in this data sheet are no longer being manufactured and may not be ordered. (OBS)

External Crystal

A 12 MHz ± 50 PPM fundamental frequency external crystal must be connected between the XTALIN and XTALOUT pins of the XR22404 device. The crystal should have a rated load capacitance of 16-20pF. However, note that both the load capacitors and feedback resistance are internal to the XR22404 device as shown.

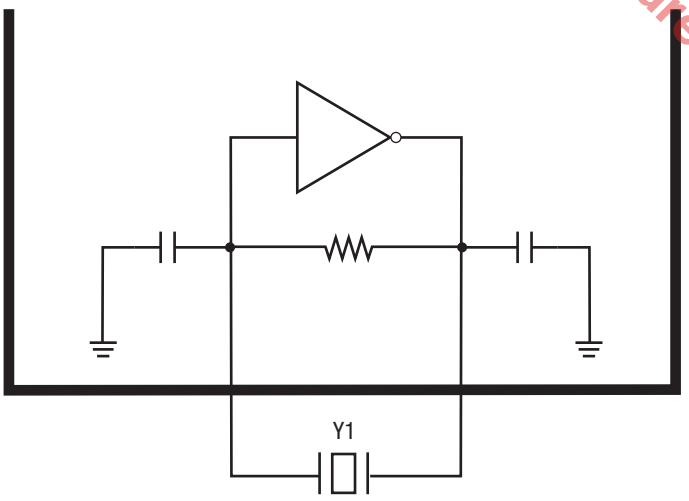

Figure 5. Typical Oscillator Connections

Mechanical Dimensions

TQFN-24

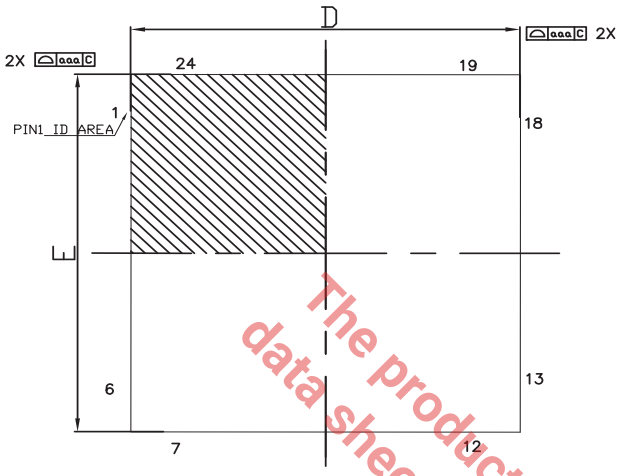

TOP VIEW

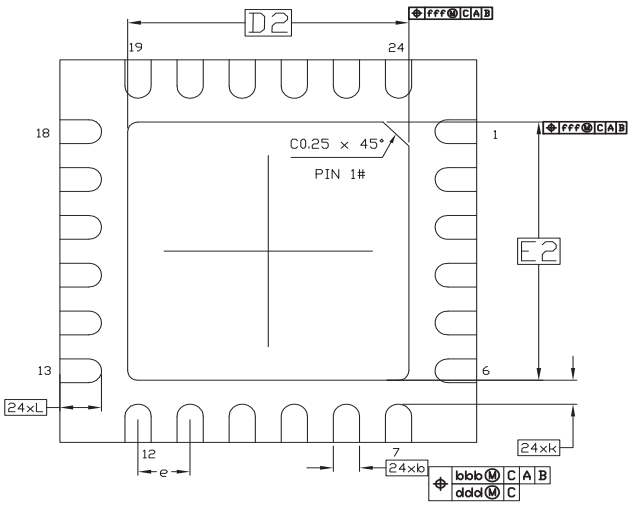

BOTTOM VIEW

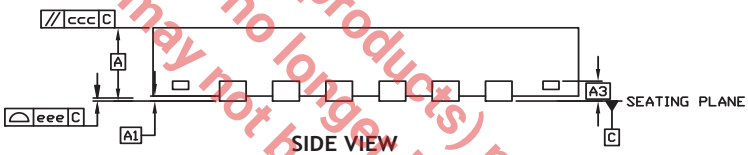

SIDE VIEW

DIM / SYMBOL	MIN	NOM	MAX
A	0.70	0.75	0.80
A1	0.00	0.02	0.05
A3	---	0.203Ref	---
b	0.18	0.23	0.30
D		4.00 BSC	
E		4.00 BSC	
e		0.50 BSC	
D2	2.70	2.80	2.90
E2	2.70	2.80	2.90
L	0.30	0.40	0.50
K	0.20	–	–
aaa		0.15	
bbb		0.10	
ccc		0.10	
ddd		0.05	
eee		0.08	
fff		0.10	
N		24	

TERMINAL DETAILS

- ALL DIMENSIONS ARE IN MILLIMETERS, ANGLES ARE IN DEGREES.
- DIMENSIONS AND TOLERANCE PER JEDEC MO-220.

Drawing No.: POD-00000091

Revision: B

The product (or products) mentioned in this data sheet are no longer being manufactured and may not be ordered (OBS)

Recommended Land Pattern and Stencil

TQFN-24

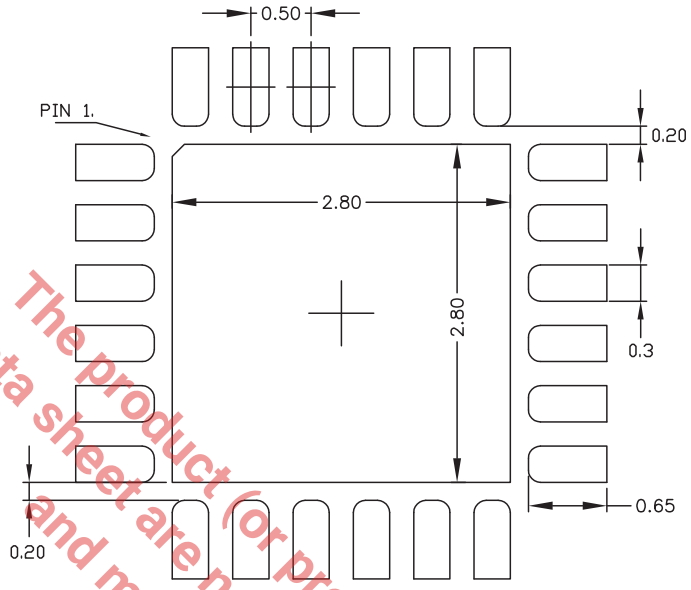

TYPICAL RECOMMENDED LAND PATTERN

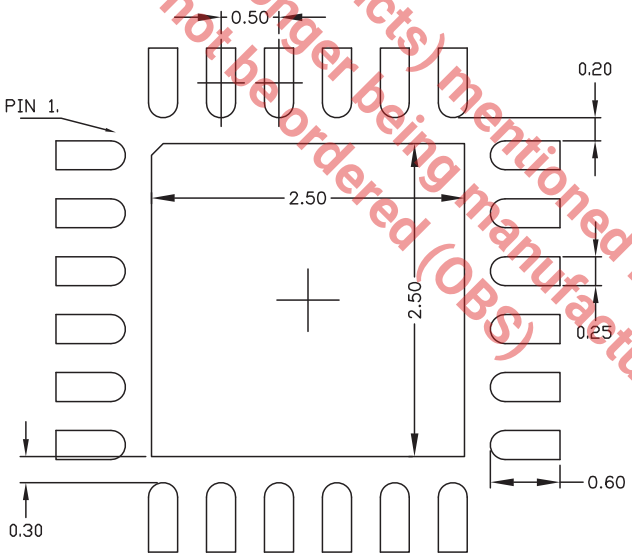

TYPICAL RECOMMENDED STENCIL

Drawing No.: POD-00000091

Revision: B

The product (or products) mentioned in this data sheet are no longer being manufactured and may not be ordered (OBS)

Package Description (Continued)

SSOP-28

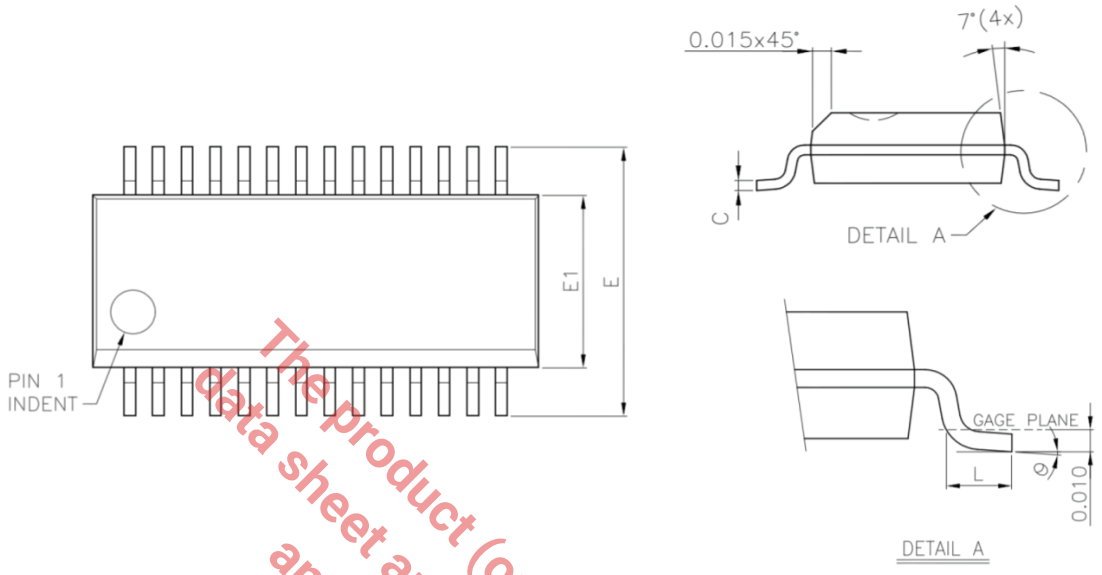

TOP VIEW

FRONT VIEW

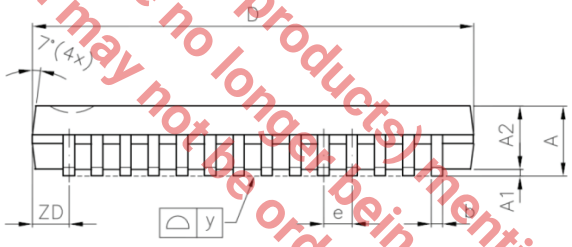

SIDE VIEW

SYMBOLS	DIMENSIONS IN MILLIMETERS		
	MIN	NOM	MAX
A	1.47	1.60	1.73
A1	0.10	—	0.25
A2	1.37	1.45	1.52
b	0.23	0.25	0.36
C	0.19	0.20	0.25
D	9.80	9.91	10.01
E	5.79	5.99	6.20
E1	3.81	3.91	3.99
e	—	0.635	—
L	0.38	0.71	1.27
ZD	—	0.825	—
y	—	—	0.076
θ	0°	—	8°

TERMINAL DIMENSION

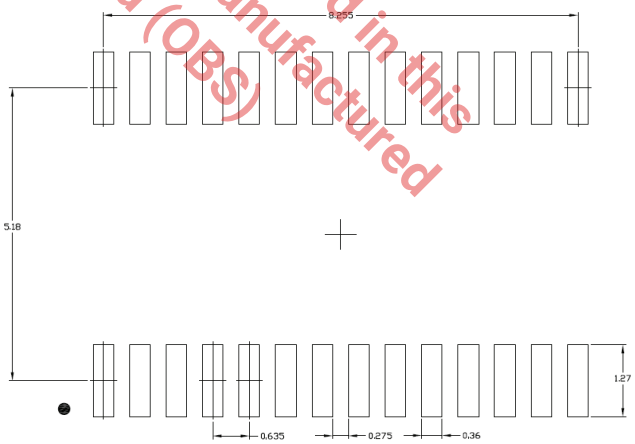

TYPICAL RECOMMENDED LAND PATTERN

1. Dimensions and tolerance per Jedec MO-150

Drawing No. : POD - 00000090
Revision: A

The product (or products) mentioned in this data sheet are no longer being manufactured and may not be ordered (OBS)

Ordering Information[1]

Part Number	Operating Temperature Range	Lead-Free	Package	Packaging Method
XR22404CL24TR-F	0°C to 70°C	Yes[2]	24-pin TQFN	Reel
XR22404CG28TR-F			28-pin SSOP	Reel
XR22404CL24EVB	Evaluation board for TQFN-24			
XR22404CG28EVB	Evaluation board for SSOP-28			

NOTE:
1. Refer to www.exar.com/XR22404 for most up-to-date Ordering Information.
2. Visit www.exar.com for additional information on Environmental Rating.

Revision History

Revision	Date	Description
1A	Aug 2016	Initial Release
1B	August 2018	Update to MaxLinear logo. Update format and Ordering Information. Changed QFN package name to TQFN. Input voltage absolute max changed to 5.5V. 3V3_OUT changed to VCC33. XTALIN pin description updated.

The product (or products) mentioned in this data sheet are no longer being manufactured and may not be ordered (OBS)

MAXLINEAR

Corporate Headquarters:
5966 La Place Court
Suite 100
Carlsbad, CA 92008
Tel.:+1 (760) 692-0711
Fax: +1 (760) 444-8598
www.maxlinear.com

High Performance Analog:
1060 Rincon Circle
San Jose, CA 95131
Tel.: +1 (669) 265-6100
Fax: +1 (669) 265-6101
www.exar.com

The content of this document is furnished for informational use only, is subject to change without notice, and should not be construed as a commitment by MaxLinear, Inc.. MaxLinear, Inc. assumes no responsibility or liability for any errors or inaccuracies that may appear in the informational content contained in this guide. Complying with all applicable copyright laws is the responsibility of the user. Without limiting the rights under copyright, no part of this document may be reproduced into, stored in, or introduced into a retrieval system, or transmitted in any form or by any means (electronic, mechanical, photocopying, recording, or otherwise), or for any purpose, without the express written permission of MaxLinear, Inc.

Maxlinear, Inc. does not recommend the use of any of its products in life support applications where the failure or malfunction of the product can reasonably be expected to cause failure of the life support system or to significantly affect its safety or effectiveness. Products are not authorized for use in such applications unless MaxLinear, Inc. receives, in writing, assurances to its satisfaction that: (a) the risk of injury or damage has been minimized; (b) the user assumes all such risks; (c) potential liability of MaxLinear, Inc. is adequately protected under the circumstances.

MaxLinear, Inc. may have patents, patent applications, trademarks, copyrights, or other intellectual property rights covering subject matter in this document. Except as expressly provided in any written license agreement from MaxLinear, Inc., the furnishing of this document does not give you any license to these patents, trademarks, copyrights, or other intellectual property.

Company and product names may be registered trademarks or trademarks of the respective owners with which they are associated.

© 2016 - 2018 MaxLinear, Inc. All rights reserved