500mA Alkaline DC/DC Boost Regulator in SOT-23

- Ultra Low Quiescent Current: 10µA
- Wide Input Voltage Range: 0.9V to 4.5V
- 90mA I_{OUT} at 1.3V Input (SP6641A-3.3V)
- 500mA I_{OUT} at 2.6V Input (SP6641B-3.3V)
- 100mA I_{OUT} at 2.0V Input (SP6641A-5.0V)
- 500mA I_{OUT} at 3.3V Input (SP6641B-5.0V)
- Fixed 3.3V or 5.0V Output Voltage
- Up to 87% Efficiency
- 0.3Ω NFET R_{DS}on
- Startup Voltage Guaranteed at 0.9V
- 0.33A Inductor Current Limit (SP6641A)
- 1A Inductor Current Limit (SP6641B)
- Logic Shutdown Control
- SOT-23-5 Package

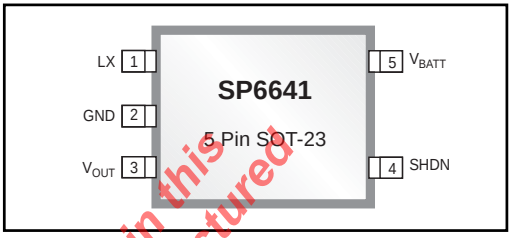

APPLICATIONS

- PDA's
- DSC's
- CD/MP3 Players
- Pagers
- Digital Cameras
- Portable Handheld Medical Devices

Now Available in Lead Free Packaging

The product (or products) mentioned in this data sheet are no longer being manufactured and may not be ordered (OBS)

DESCRIPTION

The SP6641 is an ultra-low quiescent current, high efficiency, DC-DC boost converter designed for single and dual cell alkaline, or Li-ion battery applications found in PDA's, MP3 players, and other handheld portable devices. The SP6641 features a 10µA quiescent current, a 0.3Ω N-channel charging switch, 0.9V input startup, and a 0.33A or 1.0A inductor current limiting feature. The SP6641 is offered in a 5 pin SOT-23 package and provides an extremely small power supply footprint optimized for portable applications. The SP6641 is preset to 3.3V and can be controlled by a 1nA active LOW shutdown pin.

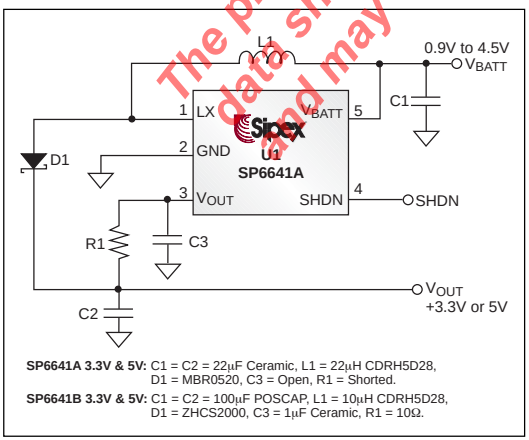

Figure 1. Typical Application Schematic

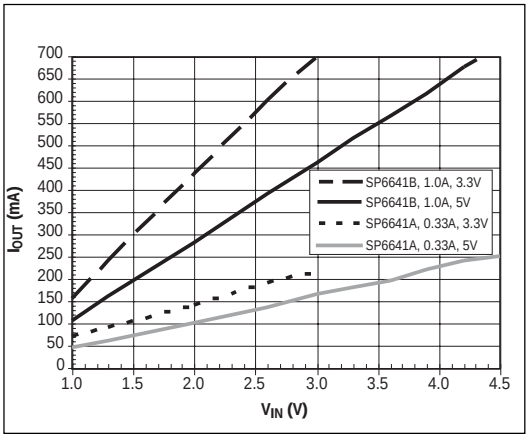

Figure 2. Maximum Load Current in Operation

 © Copyright 2002 Sipex Corporation

ABSOLUTE MAXIMUM RATINGS

These are stress ratings only and functional operation of the device at these ratings or any other above those indicated in the operation sections of the specifications below is not implied. Exposure to absolute maximum rating conditions for extended periods of time may affect reliability.

LX, V_{OUT}, SHDN, V_{BATT} to GND pin ..... -0.3 to 6.0V
LX Current 1.5A
Reverse V_{BATT} Current 220mA
Storage Temperature ..... -65°C to 150°C
Operating Temperature ..... -40°C to +85°C
Lead Temperature (Soldering, 10 sec) ..... 300 °C

ELECTRICAL SPECIFICATIONS

V_{BATT} = V_{SHDN} = 1.3V, I_{LOAD} = 0mA, -40°C <T_A < +85°C, V_{OUT} = +3.3V or +5.0V preset, typical values at 27°C unless otherwise noted.

PARAMETER	MIN	TYP	MAX	UNITS	CONDITIONS
Input Voltage Operating Range, V_{BATT}	0.5		4.5	V	after startup
Startup Voltage, V_{BATT}		0.85	0.90 1.00	V V	R_{LOAD}=3kΩ, T_A =27°C R_{LOAD}=3kΩ,-40°C <T_A < +85°C
Output Voltage, V_{OUT}	3.16 4.80	3.30 5.00	3.44 5.20	V V	3.3V V_{OUT} preset 5.0V V_{OUT} preset
Quiescent Current into V_{OUT}, $I_{Q(OUT)}$		10	15	µA	V_{OUT}=3.5V, 3.3V V_{OUT} preset V_{OUT}=5.5V, 5.0V V_{OUT} preset
Quiescent Current into V_{BATT}, I_{QB}		250	500	nA	V_{OUT}=3.5V, 3.3V V_{OUT} preset V_{OUT}=5.5V, 5.0V V_{OUT} preset
Shutdown Current into V_{OUT}, I_{SHDN}		1	500	nA	V_{SHDN} =0V
Shutdown Current into V_{BATT}, I_{SHDN}		20	100	nA	V_{SHDN} =0V
Inductor Current Limit (SP6641A)	280	330	380	mA	
Inductor Current Limit (SP6641B)	850	1000	1150	mA	
Output Current (SP6641AEK-3.3)		90 190		mA mA	V_{BATT} =1.3V V_{BATT} =2.6V
Output Current (SP6641BEK-3.3)		200 500		mA mA	V_{BATT} =1.3V V_{BATT} =2.6V
Output Current (SP6641AEK-5.0)		100 175		mA mA	V_{BATT} =2.0V V_{BATT} =3.3V
Output Current (SP6641BEK-5.0)		275 500		mA mA	V_{BATT} =2.0V V_{BATT} =3.3V
Minimum Off-Time Constant K_{OFF}		1.50		V*µs	$T_{OFF} \geq K_{OFF} / (V_{OUT} - V_{IN})$
NMOS Switch Resistance		0.3	0.75	Ω	Inmos=100mA
SHDN Input Voltage Vil Vih	 80		20	% %	% of V_{BATT} % of V_{BATT}
SHDN Input Current		1	100	nA	

The product (or products) mentioned in this data sheet are no longer being manufactured and may not be ordered (OBS)

PIN DESCRIPTION

PIN NO.	PIN NAME	DESCRIPTION
1	LX	Inductor switching node. Connect one terminal of the inductor to the positive terminal of the battery. Connect the second terminal of the inductor to this pin. The inductor charging current flows into LX, through the internal charging N-channel FET, and out through the GND pin.
2	GND	Ground pin. The internal regulator bias currents and the inductor charging current flows out of this pin.
3	V_{OUT}	Output voltage sense pin, internal regulator voltage supply, and minimum off-time one shot input. Kelvin connect this pin to the positive terminal of the output capacitor, but for SP6641B, use 10Ω series resistor and 1µF bypass per Figure 1 schematic.
4	SHDN	Shutdown. Tie this pin to V_{BATT} for normal operation. Tie this pin the ground to disable all circuitry inside the chip. In shutdown mode, the output voltage will float at a diode drop below the battery potential.
5	V_{BATT}	Battery voltage pin. The startup circuitry runs off of this pin. The regulating circuitry also uses this voltage to control the minimum off-time. $T_{OFF} \geq K_{OFF} / (V_{OUT} - V_{IN})$.

The product (or products) mentioned in this data sheet are no longer being manufactured and may not be ordered (OBS)

BLOCK DIAGRAM

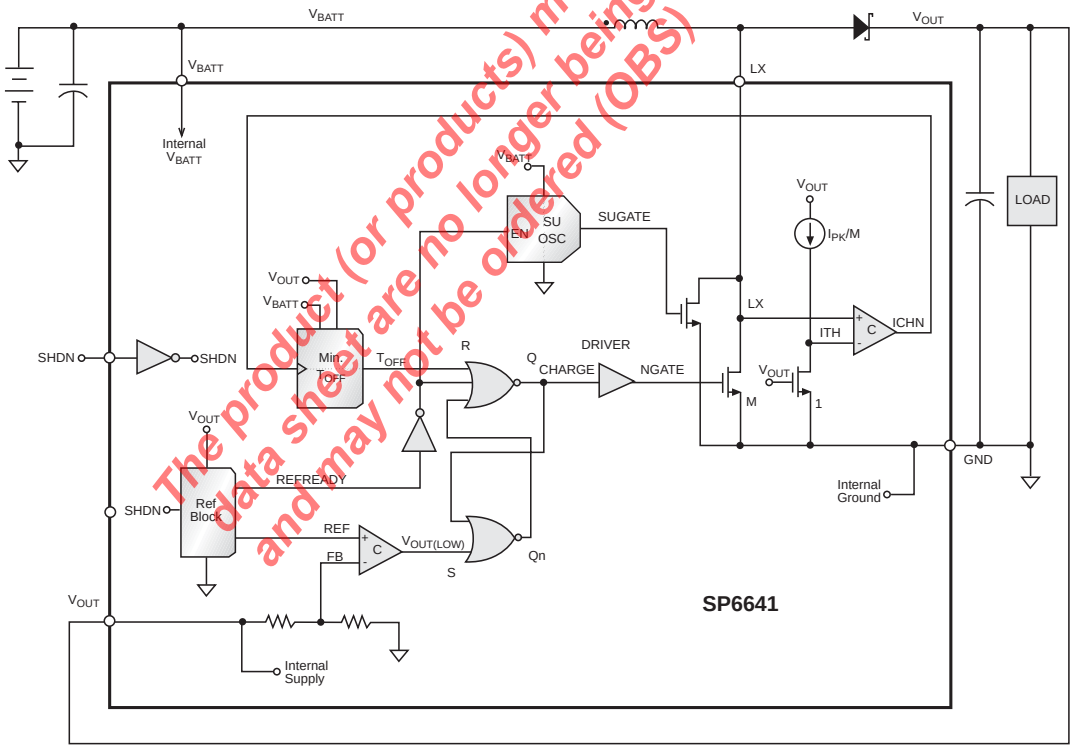

 © Copyright 2002 Sipex Corporation

PERFORMANCE CHARACTERISTICS

Refer to the circuit in Figure 1, T_{AMB} = +25°C

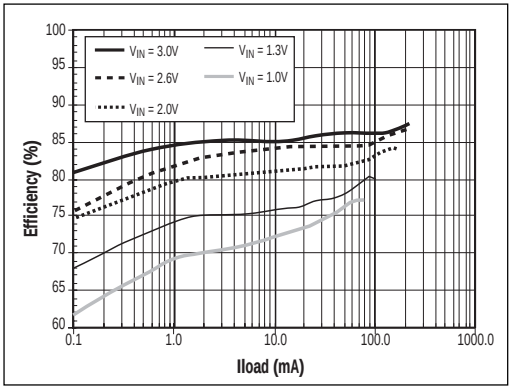

Figure 3. SP6641AEK - 3.3 Efficiency vs Load Current

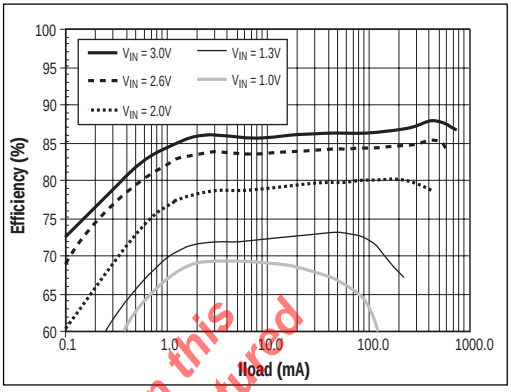

Figure 4. SP6641BEK - 3.3 Efficiency vs Load Current

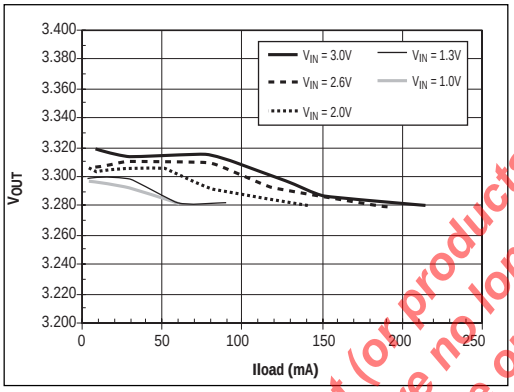

Figure 5. SP6641AEK - 3.3 Line/Load Rejection vs Load Current

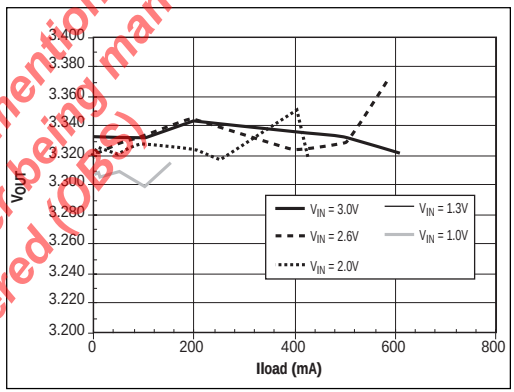

Figure 6. SP6641BEK - 3.3 Line/Load Rejection vs Load Current

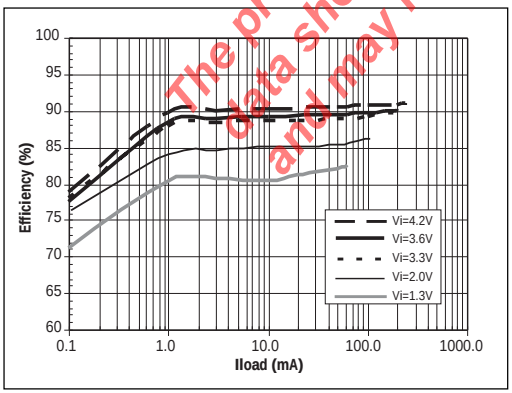

Figure 7. SP6641AEK-5.0 Efficiency Vs Load Current

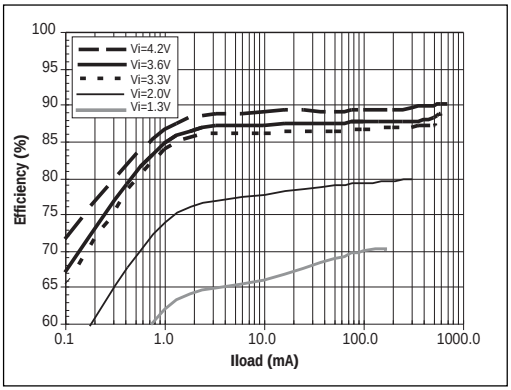

Figure 8. SP6641BEK-5.0 Efficiency Vs Load Current

The product (or products) mentioned in this data sheet are no longer being manufactured and may not be ordered (OBS)

PERFORMANCE CHARACTERISTICS

Refer to the circuit in Figure 1, T_{AMB} = +25°C

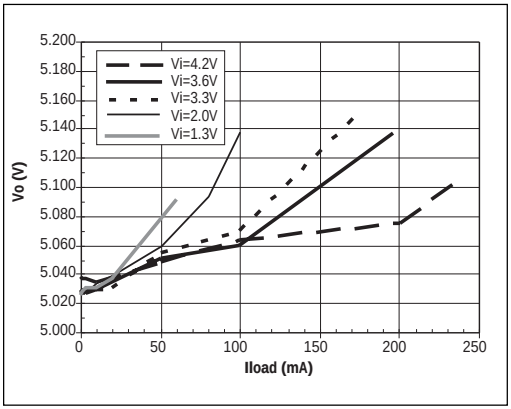

Figure 9. SP6641AEK-5.0 Line/Load Rejection Vs Load Current

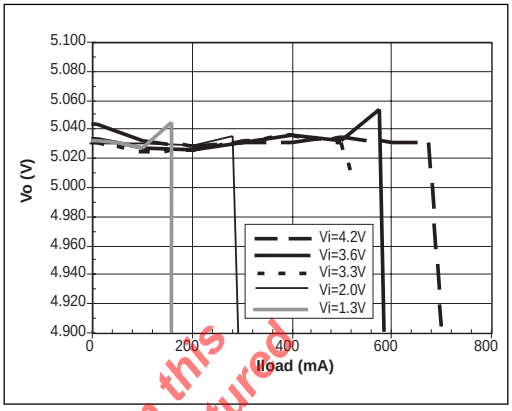

Figure 10. SP6641BEK-5.0 Line/Load Rejection Vs Load Current

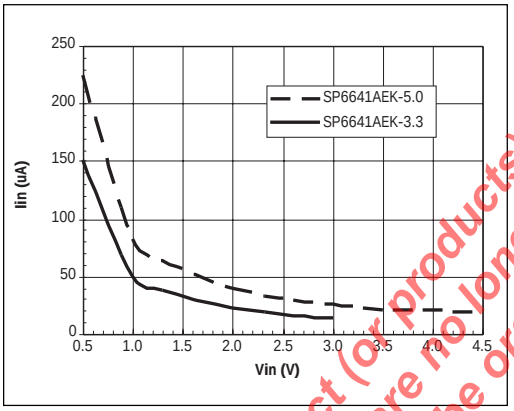

Figure 11. SP6641AEK-3.3 & SP6641AEK-5.0 No Load Battery Current

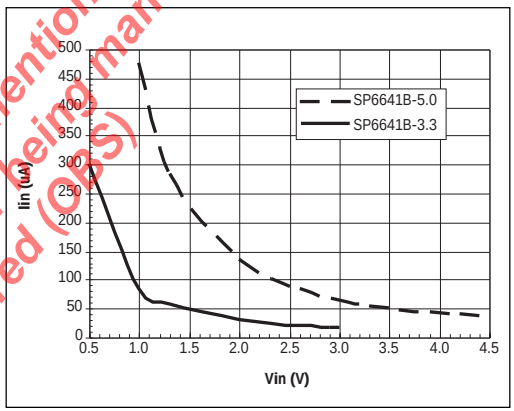

Figure 12. SP6641BEK-3.3 & SP6641AEK-5.0 No Load Battery Current

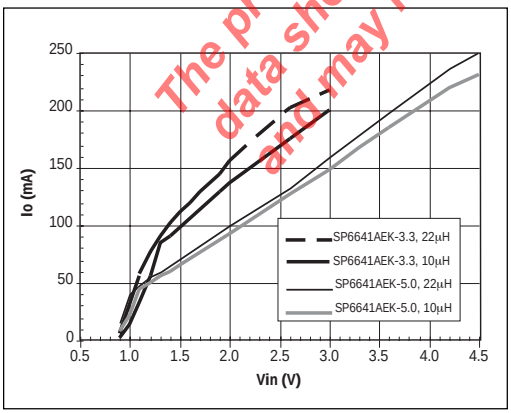

Figure 13. SP6641AEK-3.3 & SP6641AEK-5.0 Maximum Resistive Load Current in Startup

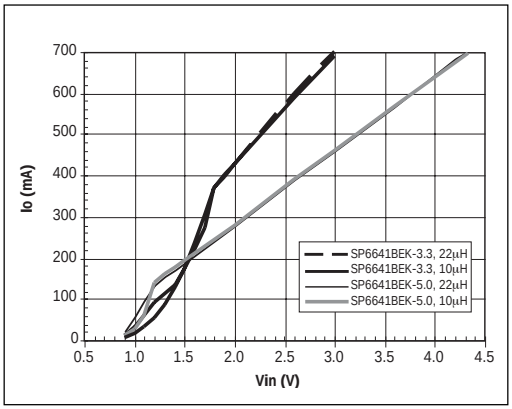

Figure 14. SP6641BEK-3.3 & SP6641BEK-5.0 Maximum Resistive Load Current in Startup

The product (or products) mentioned in this data sheet are no longer being manufactured and may not be ordered (OBS)

OPERATION

General Overview

The SP6641 is a high efficiency, low quiescent current step-up DC-DC converter ideal for single and dual cell alkaline and single cell Lithium Ion battery applications such as medical monitors, PDA's, MP3 players, and other portable end products. The SP6641's 10µA quiescent current, low 0.3Ω NFET switch, and unique PFM control scheme combine to provide excellent efficiency over a wide output power range.

Other features include a logic level enable control pin, guaranteed 0.9V startup, a tiny SOT23 5 pin package, and precise inductor peak current control. SP6641A sources up to 90mA at 1.3V, typ. and SP6641B sources up to 500mA at 2.6V, typ. by supporting different peak inductor current levels. Only two capacitors, an inductor, and a diode are required to build a power supply for the SP6641A. The SP6641B, 1A peak current requires an additional small resistor and capacitor as a low pass filter for the V_{OUT} IC power pin.

Loop Regulation

The SP6641 combines a fixed inductor peak current limit, a feed-forward minimum off-time one-shot, and a precision loop comparator to regulate the output voltage. Under light-load conditions the loop operates as a standard PFM converter. The frequency of fixed amplitude inductor current triangles is modulated to regulate the load. Under heavy load conditions, the converter adjusts the number of successive continuous mode current pulses to regulate the load. Refer to the block diagram for the following explanation of operating modes in loop regulation.

The output voltage is internally divided down and fed to the negative terminal of the loop comparator. A +1.25V bandgap reference voltage is applied to the positive terminal of the comparator. As the output voltage droops below the regulation threshold due to the load the loop comparator output (signal $V_{OUT(LOW)}$) transitions to a logic "1". This sets the SR latch and initiates inductor charging by pulling the signal NGATE high. Inductor charging continues until the current reaches the internally programmed limit, at which point, the off-time one-shot is triggered.

The off-time one-shot via signal T_{OFF} resets the SR latch regardless of the SET state ($V_{OUT(LOW)}$), opens the NMOS charge switch, and forces the inductor to discharge through the rectifying diode for a minimum time defined by the one-shot duration. The end of the off-time pulse releases the SR latch, and its output state is once again determined by the output of the loop comparator ($V_{OUT(LOW)}$). Under light load conditions, the output voltage will have been pulled above the regulation threshold during the minimum off-time, the signal $V_{OUT(LOW)}$ will be a logic "0", and the NMOS charging switch will remain open. The inductor current discharges until it reaches zero or the loop comparator triggers a new charge cycle.

Under a heavy load, the output voltage will remain below the regulation point at the end of the off-time pulse. In this condition, $V_{OUT(LOW)}$ has a logic value of 1 which immediately starts a new charge/discharge cycle defined by the peak inductor current and the minimum off-time. The inductor current will remain in a continuous conduction mode until the loop comparator indicates the output voltage is above the regulation threshold, and the inductor current will relax towards zero.

During continuous mode bursts, the inductor current frequency and ripple amplitude are controlled by the minimum off-time one-shot and the input and output voltage levels. The SP6641 sets the minimum off-time to:

$$T_{OFF} = \frac{K_{OFF}}{(V_{OUT} - V_{IN})}, \quad \text{where:}$$

K_{OFF} = Off-time Constant, typically 1.5µs*V

V_{OUT} = Output Voltage

V_{IN} = Input Voltage

Plugging the T_{OFF} expression into the boost mode equations yields the maximum output current in regulation:

$$I_{OUT(MAX)} \approx \eta \left(\frac{V_{IN}}{V_{OUT}}\right)\left(I_{PK} - \frac{K_{OFF}}{2L}\right)$$

where:

η = Efficiency, typically 0.80 to 0.90

I_{PK} = Programmed inductor peak current, typically 0.33A for the SP6641A, typically 1.0A for the SP6641B.

L = Inductor value

The product (or products) mentioned in this data sheet are no longer being manufactured and may not be ordered (OBS)

Loop Regulation: continued

The SP6641 feed forward off-time control delivers more load current than constant off-time control because the input battery voltage drops during its life cycle. The term ($I_{PK} - K_{OFF}/2L$) is the average current delivered to the output capacitor during the discharge phase. This is constant with respect to input and output voltage. With constant off-time control, the average discharge current term becomes

$$(I_{PK}\text{-}T_{OFF}*(V_{OUT}\text{-}V_{IN})/2L),$$

which decreases as the input voltage drops.

Table 1 illustrates the average inductor current delivered to the load during discharge versus the input voltage. The SP6641 feed forward off-time control and the constant off-time control are compared. For purposes of illustration, the off times of each control scheme are normalized at a typical two cell alkaline input voltage of 2.6V. The values used in Table 1 are:

I_{PK} = 0.33A
L = 22µH
V_{OUT}= 3.3V
T_{OFF} (SP6641) = 1.5V*µs/(3.3-V_{IN})
T_{OFF} (constant) = 2.14µs

SP6641A			Constant T_{OFF}	
V_{IN}	T_{OFF}	Avg I_L	T_{OFF}	Avg I_L
3.0	5.00µs	0.30A	2.14µs	0.32A
2.6	2.14µs	0.30A	2.14µs	0.30A
2.0	1.15µs	0.30A	2.14µs	0.27A
1.3	0.75µs	0.30A	2.14µs	0.23A
1.0	0.65µs	0.30A	2.14µs	0.22A

Table 1- Average I_L vs. Input Voltage

The following equation defines the burst mode frequency under heavy load conditions:

$$F_{BURST} = \left(\frac{V_{OUT} - V_{IN}}{K_{OFF}}\right)\left(\frac{V_{IN} - V_C}{V_{OUT} + V_D - V_C}\right)$$

where:

V_D = Forward schottky drop, (0.4V, typ)

V_C = Average charging switch drop, Rnmos*I_{PK}, typically 0.1V

Ignoring the conduction losses of V_D and V_C, the burst frequency equation simplifies to:

$$F_{BURST} = \frac{(V_{OUT} - V_{IN})V_{IN}}{K_{OFF}V_{OUT}}$$

Startup

The internal regulator circuitry is bootstrapped to the V_{OUT} pin. This requires a low voltage oscillator and charging switch powered from the V_{BATT} pin to pump up the output voltage until the reference is established. The reference provides a REFREADY signal that determines when output control is handed over to the regulator. REFREADY shuts down the startup circuit and enables the regulator when the reference is valid and V_{OUT} is above +1.9V. Once the regulator is given control it will continue to pump up the output at full power until regulation is reached.

For two cell alkaline input voltages and above, the output voltage will be pulled above +1.9V quickly through the rectifying diode before the reference has a chance to establish. In this scenario the startup circuit will coarsely regulate around +2.8V until the REFREADY signal asserts. This keeps the output from overshooting in startup with higher input voltages.

Startup is guaranteed at +0.9V at room temperature with a 3kΩ load. Heavier loads will require a higher input voltage.

Shutdown/Enable Control

Pin 4 of the device is a V_{BATT} referred control pin that shuts down the converter with the pin tied to ground, or enables the converter with the pin tied to V_{BATT}. When the converter is shutdown the power switch is opened and all circuit biasing is extinguished leaving only junction leakage currents on supply pins 3 and 5. The output voltage will droop to one diode drop below the battery voltage through the rectifying diode.

After pin 4 is brought high, the startup circuit is enabled and starts pumping up the output until REFREADY hands over control to the internal regulator.

The product (or products) mentioned in this data sheet are no longer being manufactured and may not be ordered (OBS)

APPLICATION INFORMATION

Circuit Layout

Printed circuit board layout is a critical part of a power supply design. Poor designs can result in excessive EMI on the voltage gradients and feedback paths on the ground planes with applications involving high switching frequencies and large peak currents. Excessive EMI can result in instability or regulation errors. All power components should be placed on the PC board as closely as possible with the traces kept short, direct, and wide (>50mils or 1.25mm). Extra copper on the PC board should be integrated into ground as a pseudo-ground plane. On a multilayer PC board, route the star ground using component-side copper fill, then connect it to the internal ground plane using vias. For the SP6641A/6641B devices, input and output filter capacitors should be soldered with their ground pins as close together as possible in a star-ground configuration. The VOUT pin must be bypassed directly to ground as close to the SP6641A/6641B devices as possible (within 0.2in or 5mm). The DC-DC converter and any digital circuitry should be placed on the opposite corner of the PC board as far away from sensitive RF and analog input stages. Noisy traces, such as from the LX pin, should be kept away from the voltage-feedback VOUT node and separated from it using grounded copper to minimize EMI. See the SP6641A/6641B Evaluation Board Manual for PC Board Layout design details.

Component Selection

Selection of capacitors, inductors and schottky diodes for SP6641A and SP6641B power supply circuits can be made through the use of Table 1 component selection. Capacitor equivalent series resistance is a major contributor to output ripple, usually greater than 60%. Low ESR capacitors are recommended. Ceramic capacitors have the lowest ESR. Low-ESR tantalum capacitors may be a more acceptable solution having both a low ESR and lower cost than large ceramic capacitors. Designers should select input and output capacitors with a rating exceeding the peak inductor current. Do not allow tantalum capacitors to exceed their ripple-current ratings. For example, in the SP6641A a 22µF, 6V, low-ESR, surface-mount tantalum output filter capacitor typically provides 60mV output ripple when stepping up from 1.3V to 3.3V at 20mA. An input filter capacitor can reduce peak currents drawn from the battery and improve efficiency. Low-ESR aluminum electrolytic capacitors are acceptable in some applications but standard aluminum electrolytic capacitors are not recommended.

In selecting an inductor, the saturation current specified for the inductor needs to be greater then the SP6641A/B peak current to avoid saturating the inductor, which would result in a loss in efficiency and could damage the inductor. The SP6641A evaluation board uses a Sumida CDRH5D28 22µH inductor with an Isat value of 0.9A and a DCR of 0.095Ω, which easily handles the Ipeak of 0.33A of the SP6641A and will deliver high efficiencies. The SP6641B evaluation board uses a Sumida CDRH5D28 10µH inductor with an Isat value of 1.3A and a DCR of 0.065Ω, which easily handles the Ipeak of 1.0A of the SP6641B and will deliver high efficiencies. Other inductors could be selected provided their Isat is greater than the Ipeak of the SP6641A/SP6641B.

Output Filter or LDO Regulator

Designers could add LC pi filters, linear post-regulators, or shielding in applications necessary to address excessive noise, voltage ripple, or EMI concerns. The LC pi filter's cutoff frequency should be at least a decade or two below the DC-DC converters' switching frequency for the specified load and input voltage. The SP6201, a small SOT23-5pin 200mA Low Drop Out linear regulator can be used at the SP6641A/6641B output to reduce output noise and ripple. The schematic in figure 15 illustrates this circuit on the SP6641A Evaluation Board with the SP6641 3.3V output followed by the Sipex SP6201 3.0V output Low Drop Out linear regulator.

The product(s) mentioned in this data sheet are no longer being manufactured and may not be ordered (OBS)

APPLICATION INFORMATION: continued

Maximum Startup Current

It should be noted that for low input voltages the SP6641 startup circuit can not support large load currents at startup. In startup the SP6641 needs to boost the output from zero volts using a charge pump which has a limited current capacity. Once the output is greater than 1.7 to 1.9V the operate circuit takes over and the SP6641 can supply much more current. Curves of maximum resistive load current in startup for the SP6641A and SP6641B are shown in Figures 13 & 14 and can be compared with Figure 2, maximum load current in operation. Also, Table 2 provides SP6641A 3.3V resistive load current in startup for some low cost 1812 size chip inductors.

From the curves in Figures 13 and 14, you can see that for low input voltages, the 22µH inductor has more current capacity at startup than the 10µH inductor, due to more energy per charge cycle in the relationship $\frac{1}{2}LI^2$. Thus for 1 cell applications, 22µH is recommended for more startup current than 10µH.

For 1-cell battery applications, it is recommended to apply any large load current after the SP6641 has started up, typically in a few millisecs. This is typically not a problem in many applications where the load is a processor whose load current is low until the processor voltage comes up.

The product (or products) mentioned in this data sheet are no longer being manufactured and may not be ordered (OBS)

TABLE 1. COMPONENT SELECTION

INDUCTORS - SURFACE MOUNT

Sipex Part Number	Inductance (µH)	Manufacturer/ Part Number	Inductor Specification: Series R (Ω)	Isat (A)	Size LxWxH (mm)	Inductor Type	Manufacturer Website
SP6641A Ipk = .33A	**22**	**Sumida CDRH5D28-220**	**0.095**	**0.90**	**5.7x5.5x3**	**Shielded Ferrite Core**	**www.sumida.com**
SP6641A Ipk = .33A	22	Coilcraft DO1608C-223	0.370	0.70	6.6x4.5x2.9	Unshielded Ferrite Core	www.coilcraft.com
SP6641A Ipk = .33A	22	TDK NLC453232T-220	0.900	0.37	4.4x3.2x3.2	Unshielded Ferrite Core	www.tdk.com
SP6641A Ipk = .33A	22	Murata LQH43C220K04	0.600	0.42	4.5x3.2x2.6	Unshielded Ferrite Core	www.murata.com
SP6641B Ipk = 1A	**10**	**Sumida CDRH5D28-100**	**0.065**	**1.30**	**5.7x5.5x3**	**Shielded Ferrite Core**	**www.sumida.com**
SP6641B Ipk = 1A	10	Coilcraft DO1608C-103	0.160	1.10	6.6x4.5x2.9	Unshielded Ferrite Core	www.coilcraft.com
SP6641B Ipk = 1A	10	Murata LQH55DN100M01	0.077	1.70	5x5x4.7	Unshielded Ferrite Core	www.murata.com
SP6641B Ipk = 1A	22	Sumida CDRH6D28-220	0.128	1.20	6.7x6.5x3	Shielded Ferrite Core	www.sumida.com
SP6641B Ipk = 1A	22	Murata LQH55DN220M01	0.160	1.20	5x5x4.7	Unshielded Ferrite Core	www.murata.com

CAPACITORS - SURFACE MOUNT & THRU-HOLE

Sipex Part Number	Capacitance (µF)	Manufacturer/ Part Number	Capacitor Specification: ESR (max) (Ω)	Ripple Current @ 45°C (A)	Size LxWxH (mm)	Voltage (V)	Capacitor Type	Manufacturer Website
SP6641A Ipk = .33A	**22**	**TDK C3225X5R0J226M**	**0.010**	**4.00**	**1210**	**6.3**	**SMT X5R Cer.**	**www.tdk.com**
SP6641B Ipk = 1A	**100**	**SANYO 10TPA100M**	**0.080**	**1.20**	**7343**	**6.3**	**SMT POSCAP Tant.**	**www.sanyovideo.com**
SP6641B Ipk = 1A	100	SANYO 16SA100M	0.030	2.70	8Dx10L	16.0	Thru-hole OS-CON	www.sanyovideo.com

SCHOTTKY DIODE - SURFACE MOUNT

Sipex Part Number	Manufacturer/ Part Number	Diode Specification: VF @ IF (V)	IF(AV) (A)	Size LxWxH (mm)	Reverse V (V)	Package Type	Manufacturer Website
SP6641A Ipk = .33A	**STMicro STPS0520Z**	**0.39**	**0.50**	**3.9x1.7x1.3**	**20**	**SOD-123**	**www.st.com**
SP6641B Ipk = 1A	**Zetex ZCHS2000**	**0.42**	**2.00**	**3x3x1.4**	**40**	**SOT23-6**	**www.zetex.com**

Note: Components highlighted in **bold** are those used on the SP6641A or SP6641B Evaluation Board.

 © Copyright 2002 Sipex Corporation

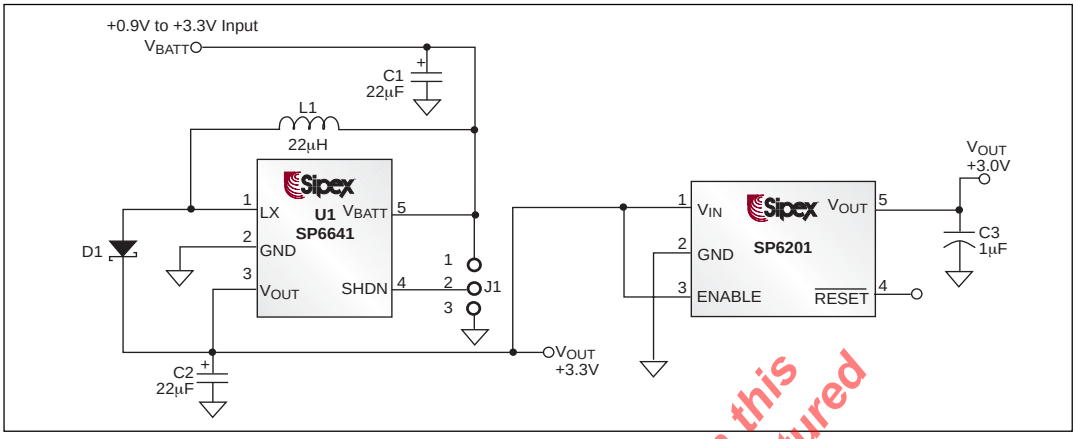

Figure 15. SP6641A 3.3V Evaluation Board with SP6201 LDO Regulator

SuperCap Application on the SP6641 Output

When the battery input to SP6641A is removed, the SP6641A output will end up in the charge mode and will slowly discharge a Supercap connected to the output. The typical Supercap of 0.22F will go from fully charged at 3.3V to less than 2V in 5 minutes. The following application circuit in figure 16 is recommended to disconnect the SP6641 output from the SuperCap when the battery is removed. The small SOT23-3pin MOS switches are an inexpensive addition to the SP6641 circuit and work well to maintain SuperCap voltage to retain Non-Volatile CMOS Memory while a battery is changed.

The product (or products) mentioned in this data sheet are no longer being manufactured and may not be ordered (OBS)

TABLE 2. SP6641A Resistive Load Current in Startup - low cost inductors

SP6641A APPLICATION CIRCUIT WITH PANASONIC INDUCTOR L1 = ELJ-PB220KF 22µH, IDCmax = 300mA, DCR = 1.0Ω					SP6641A APPLICATION CIRCUIT WITH TDK INDUCTOR L1 = NLC453232T-220K 22µH, IDCmax = 370mA, DCR = 0.9Ω				
V_{IN} V	Startup Load R_{OUT} (min) Ω	V_{OUT} after Startup V	I_{OUT} after Startup mA	Startup then Load mA (max)	V_{IN} V	Startup Load R_{OUT} (min) Ω	V_{OUT} after Startup V	I_{OUT} after Startup mA	Startup then Load mA (max)
0.86	16000	3.31	0.2	37	0.86	16000	3.30	0.2	42
0.88	1500	3.31	2	39	0.88	1500	3.30	2	43
0.90	800	3.30	4	40	0.90	900	3.30	4	44
0.95	230	3.30	14	44	0.95	260	3.30	13	48
1.00	125	3.30	26	48	1.00	126	3.30	26	52
1.10	73	3.29	45	56	1.10	66	3.29	50	60
1.20	58	3.29	57	63	1.20	49	3.29	67	69
1.30	50	3.28	66	71	1.30	43	3.29	77	77
1.40	43	3.28	76	78	1.40	39	3.29	84	84
1.50	39	3.28	84	86	1.50	36	3.29	91	91

 © Copyright 2002 Sipex Corporation

Low Battery Circuit for SP6641 Application

The circuit in figure 17 uses the Sipex SPX432 shunt regulator as a reference and comparator circuit to detect a low battery condition and give a high level, typically 1.7V output. When the battery is good, the SPX432 output is low, but not at ground but at 0.8V or about one Vbe below the 1.24V reference. To translate that level to a CMOS Low of less than 0.4V, an NPN and 2 signal diodes can be added to the SPX432 output, as shown. The small SOT23-3pin SPX432 and 2N3904 bipolar transistor and diodes are small and inexpensive to add to the SP6641 circuit and work well to add a Battery Low detection circuit, with the addition of about 130µA current from 3.3V out. As a bonus, the output of this circuit can be used to drive the SP6641 SHDN_N pin 3 to GND when the battery is removed, which would reset the SP6641 and eliminate the need for the SuperCap Switch shown in figure 16.

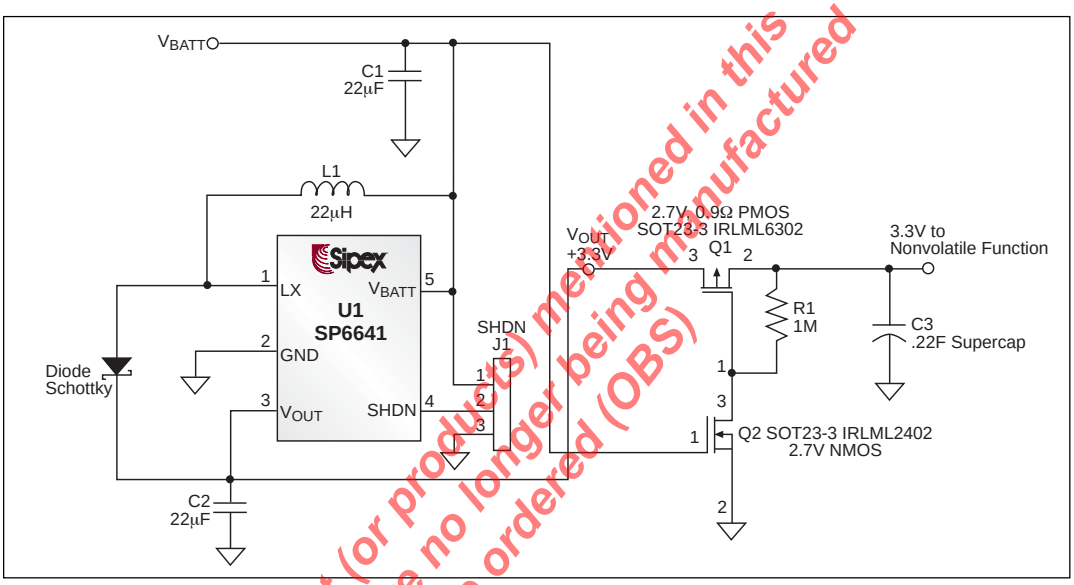

Figure 16. SP6641A 3.3V with SuperCap Switch

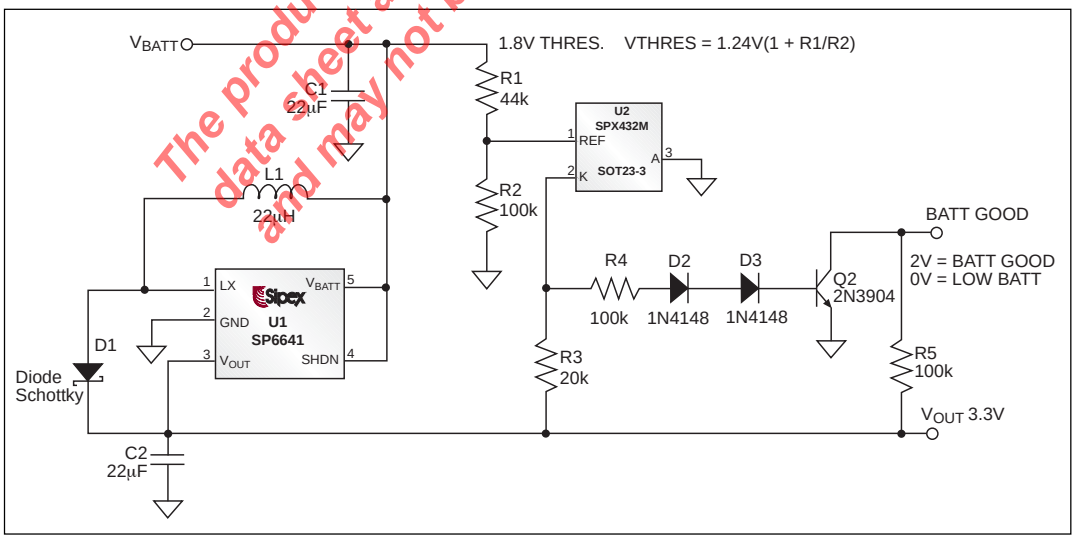

Figure 17. SP6641A 3.3V with Low Battery Detection

The product (or products) mentioned in this data sheet are no longer being manufactured and may not be ordered (OBS)

PACKAGE: 5 Lead SOT23

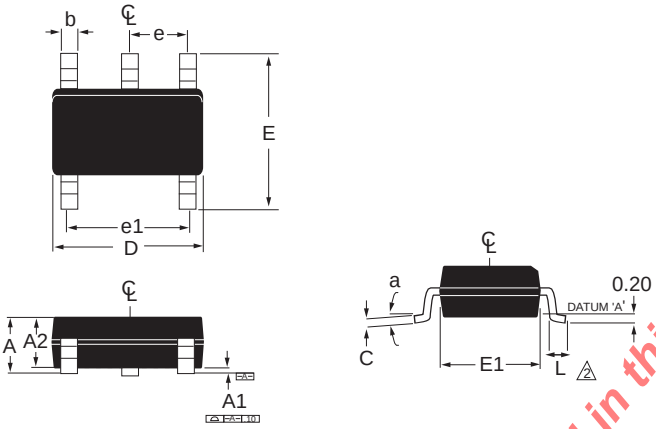

SYMBOL	MIN	MAX
A	0.90	1.45
A1	0.00	0.15
A2	0.90	1.30
b	0.25	0.50
C	0.09	0.20
D	2.80	3.10
E	2.60	3.00
E1	1.50	1.75
L	0.35	0.55
e	0.95ref	
e1	1.90ref	
a	0°	10°

The product (or products) mentioned in this data sheet are no longer being manufactured and may not be ordered (OBS)

ORDERING INFORMATION

Part Number	TOP MARK	Temperature Range	Package Type
SP6641AEK-3.3/TR	K1	-40°C to 85°C	*(Tape & Reel)* 5-Pin SOT-23
SP6641BEK-3.3/TR	L1	-40°C to 85°C	*(Tape & Reel)* 5-Pin SOT-23
SP6641AEK-5.0/TR	P1	-40°C to 85°C	*(Tape & Reel)* 5-Pin SOT-23
SP6641BEK-5.0/TR	Q1	-40°C to 85°C	*(Tape & Reel)* 5-Pin SOT-23

Available in lead free packaging. To order add “-L” suffix to part number.

Example: SP6641AEK-3.3/TR = standard; SP6641AEK-L-3.3/TR = lead free, Top Mark “H4”.

/TR = Tape and Reel

Pack quantity is 2,500 for SOT23.

The product (or products) mentioned in this data sheet are no longer being manufactured and may not be ordered (OBS)

SIGNAL PROCESSING EXCELLENCE

Sipex Corporation

Headquarters and Sales Office
22 Linnell Circle
Billerica, MA 01821
TEL: (978) 667-8700
FAX: (978) 670-9001
e-mail: sales@sipex.com

Sales Office
233 South Hillview Drive
Milpitas, CA 95035
TEL: (408) 934-7500
FAX: (408) 935-7600

Sipex Corporation reserves the right to make changes to any products described herein. Sipex does not assume any liability arising out of the application or use of any product or circuit described herein; neither does it convey any license under its patent rights nor the rights of others.