GENERAL DESCRIPTION

The XRT83VSH38 is a fully integrated 8-channel short-haul line interface unit (LIU) that operates from a 1.8V and a 3.3V power supply. Using internal termination, the LIU provides one bill of materials to operate in T1, E1, or J1 mode with minimum external components. The LIU features are programmed through a standard parallel or serial microprocessor interface. EXAR's LIU has patented high impedance circuits that allow the transmitter outputs and receiver inputs to be high impedance when experiencing a power failure or when the LIU is powered off. Key design features within the LIU optimize 1:1 or 1+1 redundancy and non-intrusive monitoring applications to ensure reliability without using relays.

The on-chip clock synthesizer generates T1/E1/J1 clock rates from a selectable external clock frequency and outputs a clock reference of the line rate chosen.

Additional features include RLOS, a 16-bit LCV counter for each channel, AIS, QRSS generation/ detection, TAOS, DMO, and diagnostic loopback modes.

APPLICATIONS

- T1 Digital Cross-Connects (DSX-1)
- ISDN Primary Rate Interface
- CSU/DSU E1/T1/J1 Interface
- T1/E1/J1 LAN/WAN Routers
- Public switching Systems and PBX Interfaces
- T1/E1/J1 Multiplexer and Channel Banks

The product(s) mentioned in this data sheet are no longer being manufactured and may not be ordered (OBS)

FIGURE 1. BLOCK DIAGRAM OF THE XRT83VSH38 T1/E1/J1 LIU (HOST MODE)

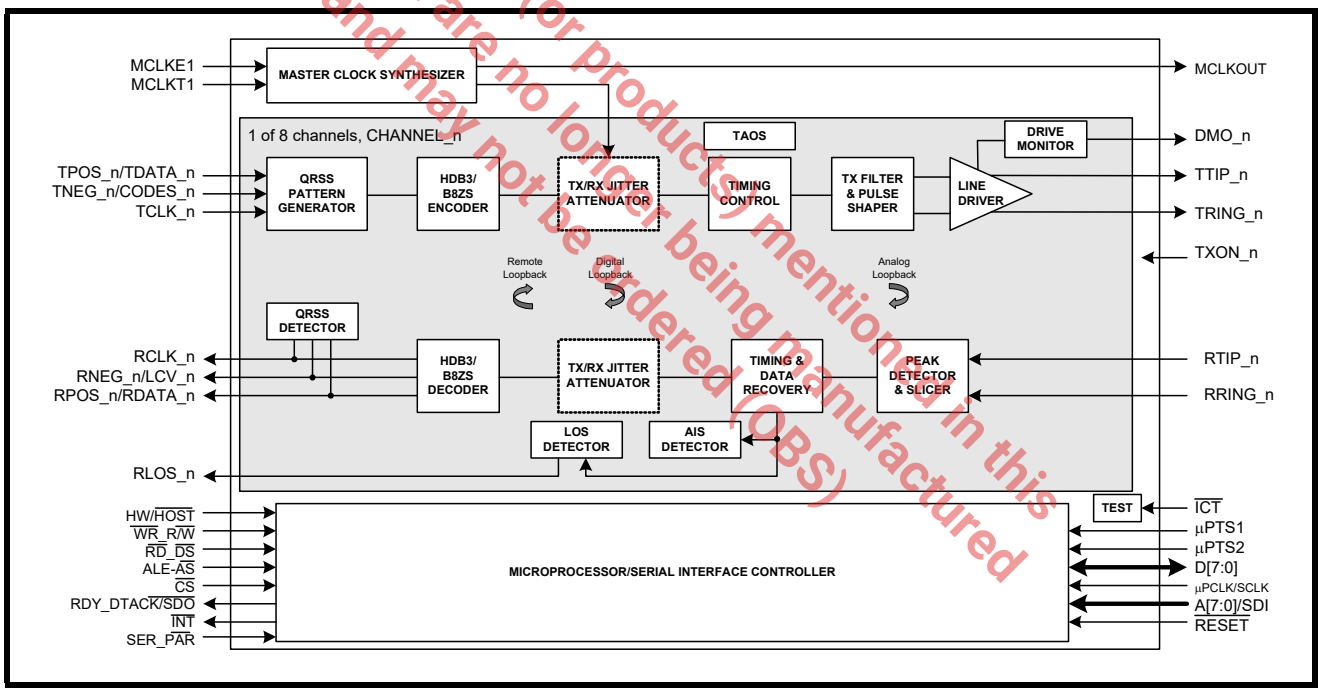

FIGURE 2. BLOCK DIAGRAM OF THE XRT83VSH38 T1/E1/J1 LIU (HARDWARE MODE)

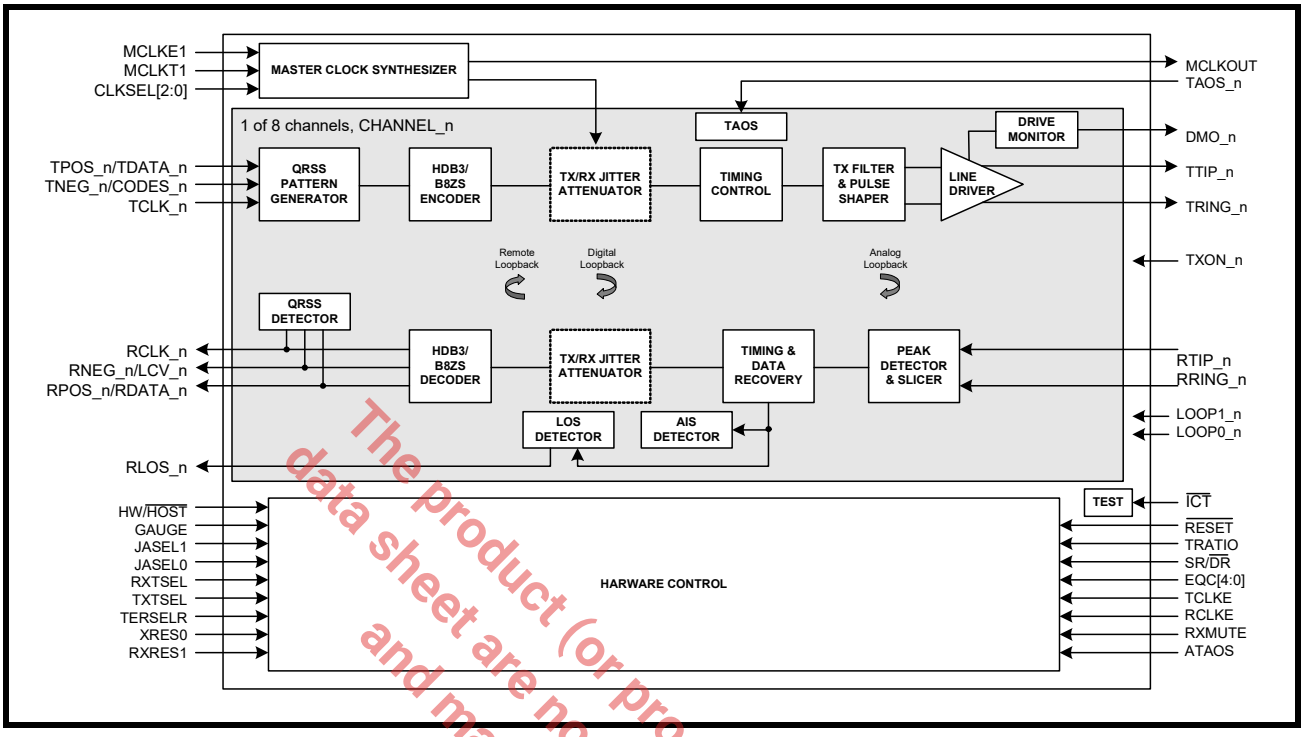

The product (or products) mentioned in this data sheet are no longer being manufactured and may not be ordered (OBS)

FEATURES

- Fully integrated eight channel short-haul transceivers for T1/J1 (1.544MHz) and E1 (2.048MHz) applications
- T1/E1/J1 short haul and clock rate are per port selectable through software without changing components
- Internal Impedance matching on both receive and transmit for 75Ω (E1), 100Ω (T1), 110Ω (J1), and 120Ω (E1) applications are per port selectable through software without changing components
- Power down on a per channel basis with independent receive and transmit selection
- Five pre-programmed transmit pulse settings for T1 short haul applications per channel
- User programable Arbitrary Pulse mode
- On-Chip transmit short-circuit protection and limiting protects line drivers from damage on a per channel basis
- Selectable Crystal-Less digital jitter attenuators (JA) with 32-Bit or 64-Bit FIFO for the receive or transmit path
- Driver failure monitor output (DMO) alerts of possible system or external component problems
- Transmit outputs and receive inputs may be "High" impedance for protection or redundancy applications on a per channel basis
- Support for automatic protection switching
- 1:1 and 1+1 protection without relays
- Receive monitor mode handles 0 to 6dB resistive attenuation (flat loss) along with 0 to 6dB cable loss for both T1 and E1
- Loss of signal (RLOS) according to ITU-T G.775/ETS300233 (E1) and ANSI T1.403 (T1/J1)
- Programmable data stream muting upon RLOS detection
- On-Chip HDB3/B8ZS encoder/decoder with an internal 16-bit LCV counter for each channel
- On-Chip digital clock recovery circuit for high input jitter tolerance
- QRSS/PRBS pattern generator and detection for testing and monitoring
- Error and bipolar violation insertion and detection
- Transmit all ones (TAOS) Generators and Detectors
- Supports local analog, remote, digital, and dual loopback modes
- Supports gapped clocks for mapper/multiplexer applications
- 1.8V Digital Inner Core
- 3.3V I/O Supply and Analog Inner Core
- 225 ball BGA package
- -40°C to +85°C Temperature Range

The product(s) mentioned in this data sheet are no longer being manufactured and may not be ordered (OBS)

ORDERING INFORMATION(1)

PART NUMBER	OPERATING TEMPERATURE RANGE	LEAD-FREE	PACKAGE	PACKAGING METHOD
XRT83VSH38IB-F	-40°C to +85°C	Yes(2)	225 Ball BGA	Tray

NOTE:

1. *Refer to www.exar.com/XRT83VSH38 for most-up-to-date Ordering Information.*
2. *Visit www.exar.com for additional information on Environmental Rating.*

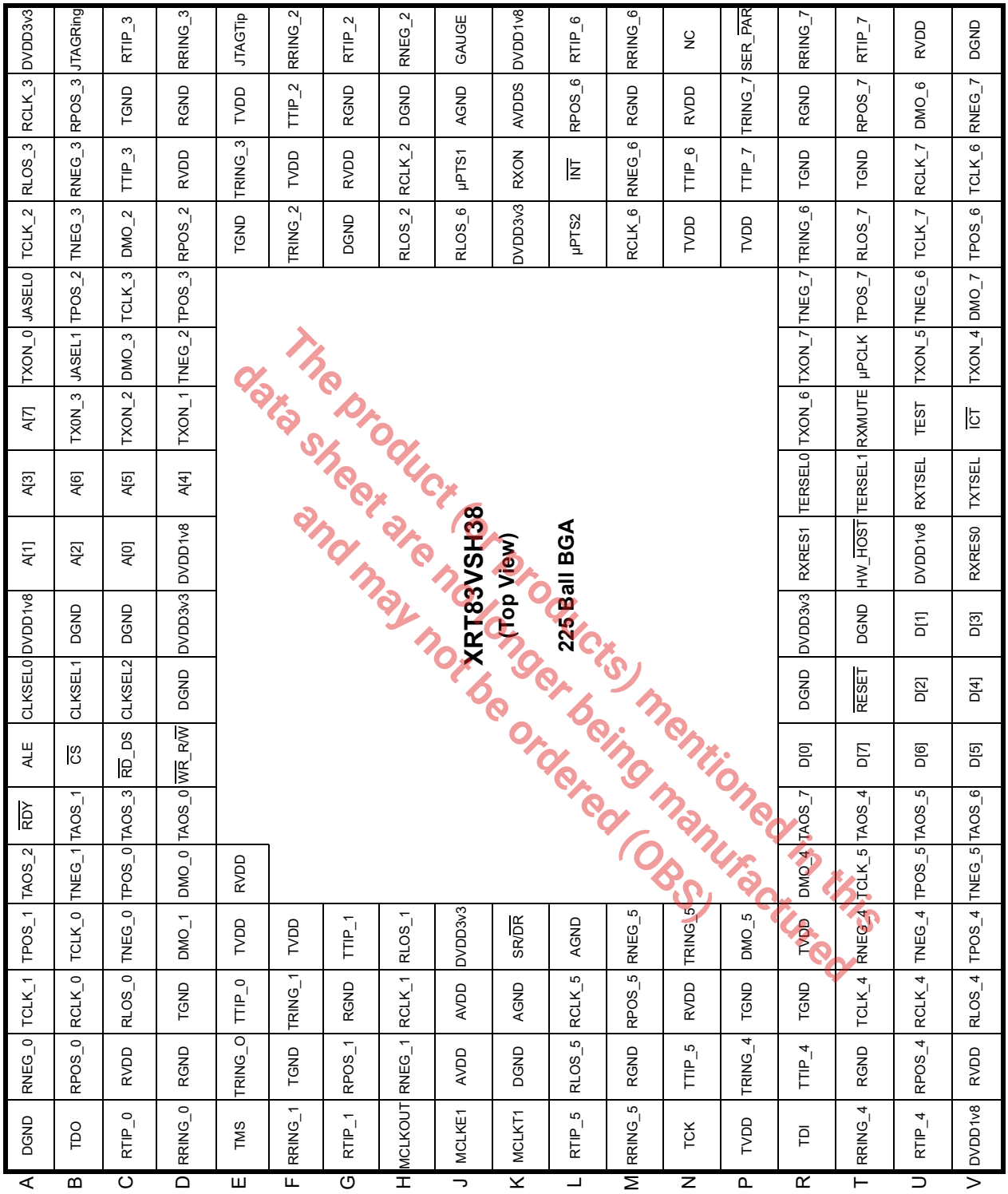

The product (or products) mentioned in this data sheet are no longer being manufactured and may not be ordered (OBS)

TABLE OF CONTENTS

GENERAL DESCRIPTION 1
APPLICATIONS 1
FIGURE 1. BLOCK DIAGRAM OF THE XRT83VSH38 T1/E1/J1 LIU (HOST MODE) 1
FIGURE 2. BLOCK DIAGRAM OF THE XRT83VSH38 T1/E1/J1 LIU (HARDWARE MODE) 2
FEATURES 3
ORDERING INFORMATION(1) 3
TABLE OF CONTENTS I
PIN DESCRIPTION BY FUNCTION 5
RECEIVE SECTION 5
TRANSMIT SECTION 7
PARALLEL MICROPROCESSOR INTERFACE 9
JITTER ATTENUATOR 11
CLOCK SYNTHESIZER 11
ALARM FUNCTIONS/REDUNDANCY SUPPORT 13
SERIAL MICROPROCESSOR INTERFACE 15
POWER AND GROUND 16
FUNCTIONAL DESCRIPTION 18
1.0 HARDWARE MODE VS HOST MODE 18
1.1 FEATURE DIFFERENCES IN HARDWARE MODE 18
TABLE 1: DIFFERENCES BETWEEN HARDWARE MODE AND HOST MODE 18
2.0 MASTER CLOCK GENERATOR 19
FIGURE 3. TWO INPUT CLOCK SOURCE 19
FIGURE 4. ONE INPUT CLOCK SOURCE 19
TABLE 2: MASTER CLOCK GENERATOR 19
3.0 RECEIVE PATH LINE INTERFACE 20
FIGURE 5. SIMPLIFIED BLOCK DIAGRAM OF THE RECEIVE PATH 20
3.1 LINE TERMINATION (RTIP/RRING) 20
3.1.1 CASE 1: INTERNAL TERMINATION 20
TABLE 3: SELECTING THE INTERNAL IMPEDANCE 20
FIGURE 6. TYPICAL CONNECTION DIAGRAM USING INTERNAL TERMINATION 20
3.1.2 CASE 2: INTERNAL TERMINATION WITH ONE EXTERNAL FIXED RESISTOR FOR ALL MODES 21
TABLE 4: SELECTING THE VALUE OF THE EXTERNAL FIXED RESISTOR 21
FIGURE 7. TYPICAL CONNECTION DIAGRAM USING ONE EXTERNAL FIXED RESISTOR 21
3.2 CLOCK AND DATA RECOVERY 22
FIGURE 8. RECEIVE DATA UPDATED ON THE RISING EDGE OF RCLK 22
FIGURE 9. RECEIVE DATA UPDATED ON THE FALLING EDGE OF RCLK 22
TABLE 5: TIMING SPECIFICATIONS FOR RCLK/RPOS/RNEG 22
3.2.1 RECEIVE SENSITIVITY 22
FIGURE 10. TEST CONFIGURATION FOR MEASURING RECEIVE SENSITIVITY 23
3.2.2 INTERFERENCE MARGIN 23
FIGURE 11. TEST CONFIGURATION FOR MEASURING INTERFERENCE MARGIN 23
3.2.3 GENERAL ALARM DETECTION AND INTERRUPT GENERATION 23
FIGURE 12. INTERRUPT GENERATION PROCESS 23
3.3 RECEIVE JITTER ATTENUATOR 24
3.4 HDB3/B8ZS DECODER 25
3.5 RPOS/RNEG/RCLK 25
FIGURE 13. SINGLE RAIL MODE WITH A FIXED REPEATING "0011" PATTERN 25
FIGURE 14. DUAL RAIL MODE WITH A FIXED REPEATING "0011" PATTERN 25
3.6 RXMUTE (RECEIVER LOS WITH DATA MUTING) 26
FIGURE 15. SIMPLIFIED BLOCK DIAGRAM OF THE RXMUTE FUNCTION 26
4.0 TRANSMIT PATH LINE INTERFACE 27
FIGURE 16. SIMPLIFIED BLOCK DIAGRAM OF THE TRANSMIT PATH 27
4.1 TCLK/TPOS/TNEG DIGITAL INPUTS 27
FIGURE 17. TRANSMIT DATA SAMPLED ON FALLING EDGE OF TCLK 27
FIGURE 18. TRANSMIT DATA SAMPLED ON RISING EDGE OF TCLK 27
TABLE 6: TIMING SPECIFICATIONS FOR TCLK/TPOS/TNEG 28
4.2 HDB3/B8ZS ENCODER 28
TABLE 7: EXAMPLES OF HDB3 ENCODING 28
TABLE 8: EXAMPLES OF B8ZS ENCODING 28

The product(s) mentioned in this data sheet are no longer being manufactured and may not be ordered (OBS)

4.3 TRANSMIT JITTER ATTENUATOR 29
TABLE 9: MAXIMUM GAP WIDTH FOR MULTIPLEXER/MAPPER APPLICATIONS 29
4.4 TAOS (TRANSMIT ALL ONES) 29
FIGURE 19. TAOS (TRANSMIT ALL ONES) 29
4.5 TRANSMIT DIAGNOSTIC FEATURES 29
4.5.1 ATAOS (AUTOMATIC TRANSMIT ALL ONES) 29
FIGURE 20. SIMPLIFIED BLOCK DIAGRAM OF THE ATAOS FUNCTION 30
4.5.2 QRSS/PRBS GENERATION 30
TABLE 10: RANDOM BIT SEQUENCE POLYNOMIALS 30
4.5.3 T1 SHORT HAUL LINE BUILD OUT (LBO) 30
TABLE 11: SHORT HAUL LINE BUILD OUT 30
4.5.4 ARBITRARY PULSE GENERATOR FOR T1 AND E1 30
FIGURE 21. ARBITRARY PULSE SEGMENT ASSIGNMENT 31
4.6 DMO (DIGITAL MONITOR OUTPUT) 31
4.7 LINE TERMINATION (TTIP/TRING) 31
FIGURE 22. TYPICAL CONNECTION DIAGRAM USING INTERNAL TERMINATION 31
5.0 T1/E1 APPLICATIONS 32
5.1 LOOPBACK DIAGNOSTICS 32
5.1.1 LOCAL ANALOG LOOPBACK 32
FIGURE 23. SIMPLIFIED BLOCK DIAGRAM OF LOCAL ANALOG LOOPBACK 32
5.1.2 REMOTE LOOPBACK 32
FIGURE 24. SIMPLIFIED BLOCK DIAGRAM OF REMOTE LOOPBACK 32
5.1.3 DIGITAL LOOPBACK 33
FIGURE 25. SIMPLIFIED BLOCK DIAGRAM OF DIGITAL LOOPBACK 33
5.1.4 DUAL LOOPBACK 33
FIGURE 26. SIMPLIFIED BLOCK DIAGRAM OF DUAL LOOPBACK 33
5.2 LINE CARD REDUNDANCY 34
5.2.1 1:1 AND 1+1 REDUNDANCY WITHOUT RELAYS 34
5.2.2 TRANSMIT INTERFACE WITH 1:1 AND 1+1 REDUNDANCY 34
FIGURE 27. SIMPLIFIED BLOCK DIAGRAM OF THE TRANSMIT INTERFACE FOR 1:1 AND 1+1 REDUNDANCY 34
5.2.3 RECEIVE INTERFACE WITH 1:1 AND 1+1 REDUNDANCY 35
FIGURE 28. SIMPLIFIED BLOCK DIAGRAM OF THE RECEIVE INTERFACE FOR 1:1 AND 1+1 REDUNDANCY 35
5.2.4 N+1 REDUNDANCY USING EXTERNAL RELAYS 36
5.2.5 TRANSMIT INTERFACE WITH N+1 REDUNDANCY 36
FIGURE 29. SIMPLIFIED BLOCK DIAGRAM OF THE TRANSMIT INTERFACE FOR N+1 REDUNDANCY 36
5.2.6 RECEIVE INTERFACE WITH N+1 REDUNDANCY 37
FIGURE 30. SIMPLIFIED BLOCK DIAGRAM OF THE RECEIVE INTERFACE FOR N+1 REDUNDANCY 37
5.3 POWER FAILURE PROTECTION 38
5.4 OVERVOLTAGE AND OVERCURRENT PROTECTION 38
5.5 NON-INTRUSIVE MONITORING 38
FIGURE 31. SIMPLIFIED BLOCK DIAGRAM OF A NON-INTRUSIVE MONITORING APPLICATION 38
6.0 MICROPROCESSOR INTERFACE 39
6.1 SERIAL MICROPROCESSOR INTERFACE BLOCK (BGA PACKAGE ONLY) 39
FIGURE 32. SIMPLIFIED BLOCK DIAGRAM OF THE SERIAL MICROPROCESSOR INTERFACE 39
6.1.1 SERIAL TIMING INFORMATION 39
FIGURE 33. TIMING DIAGRAM FOR THE SERIAL MICROPROCESSOR INTERFACE 39
6.1.2 24-BIT SERIAL DATA INPUT DESCRITPTION 40
6.1.3 ADDR[7:0] (SCLK1 - SCLK8) 40
6.1.4 R/W (SCLK9) 40
6.1.5 DUMMY BITS (SCLK10 - SCLK16) 40
6.1.6 DATA[7:0] (SCLK17 - SCLK24) 40
6.1.7 8-BIT SERIAL DATA OUTPUT DESCRIPTION 40
FIGURE 34. TIMING DIAGRAM FOR THE MICROPROCESSOR SERIAL INTERFACE 41
TABLE 12: MICROPROCESSOR SERIAL INTERFACE TIMINGS (TA = 250C, VDD=3.3V± 5% AND LOAD = 10PF) 41
6.2 PARALLEL MICROPROCESSOR INTERFACE BLOCK 42
TABLE 13: SELECTING THE MICROPROCESSOR INTERFACE MODE 42
FIGURE 35. SIMPLIFIED BLOCK DIAGRAM OF THE MICROPROCESSOR INTERFACE BLOCK 42
6.3 THE MICROPROCESSOR INTERFACE BLOCK SIGNALS 43
TABLE 14: XRT83VSH38 MICROPROCESSOR INTERFACE SIGNALS THAT EXHIBIT CONSTANT ROLES IN BOTH INTEL AND MOTOROLA MODES43
TABLE 15: INTEL MODE: MICROPROCESSOR INTERFACE SIGNALS 43
TABLE 16: MOTOROLA MODE: MICROPROCESSOR INTERFACE SIGNALS 44
6.4 INTEL MODE PROGRAMMED I/O ACCESS (ASYNCHRONOUS) 45
FIGURE 36. INTEL MP INTERFACE SIGNALS DURING PROGRAMMED I/O READ AND WRITE OPERATIONS 46
TABLE 17: INTEL MICROPROCESSOR INTERFACE TIMING SPECIFICATIONS 46

The product (or products) mentioned in this data sheet are no longer being manufactured and may not be ordered (OBS)

6.5 MOTOROLA MODE PROGRAMMED I/O ACCESS (ASYNCHRONOUS) 47
FIGURE 37. MOTOROLA 68K MP INTERFACE SIGNALS DURING PROGRAMMED I/O READ AND WRITE OPERATIONS 48
TABLE 18: MOTOROLA 68K MICROPROCESSOR INTERFACE TIMING SPECIFICATIONS 48
TABLE 19: MICROPROCESSOR REGISTER ADDRESS (ADDR[7:0]) 49
TABLE 20: MICROPROCESSOR REGISTER CHANNEL DESCRIPTION 49
TABLE 21: MICROPROCESSOR REGISTER 0X00H BIT DESCRIPTION 51
TABLE 22: CABLE LENGTH SETTING 52
TABLE 23: MICROPROCESSOR REGISTER 0X01H BIT DESCRIPTION 52
TABLE 24: MICROPROCESSOR REGISTER 0X02H BIT DESCRIPTION 54
TABLE 25: MICROPROCESSOR REGISTER 0X03H BIT DESCRIPTION 54
TABLE 26: MICROPROCESSOR REGISTER 0X04H BIT DESCRIPTION 55
TABLE 27: MICROPROCESSOR REGISTER 0X05H BIT DESCRIPTION 56
TABLE 28: MICROPROCESSOR REGISTER 0X06H BIT DESCRIPTION 58
TABLE 29: MICROPROCESSOR REGISTER 0X08H BIT DESCRIPTION 59
TABLE 30: MICROPROCESSOR REGISTER 0X09H BIT DESCRIPTION 59
TABLE 31: MICROPROCESSOR REGISTER 0X0AH BIT DESCRIPTION 59
TABLE 32: MICROPROCESSOR REGISTER 0X0BH BIT DESCRIPTION 60
TABLE 33: MICROPROCESSOR REGISTER 0X0CH BIT DESCRIPTION 60
TABLE 34: MICROPROCESSOR REGISTER 0X0DH BIT DESCRIPTION 60
TABLE 35: MICROPROCESSOR REGISTER 0X0EH BIT DESCRIPTION 60
TABLE 36: MICROPROCESSOR REGISTER 0X0FH BIT DESCRIPTION 61
TABLE 37: MICROPROCESSOR REGISTER 0X80H, BIT DESCRIPTION 61
CLOCK SELECT REGISTER 62
FIGURE 38. REGISTER 0X81H SUB REGISTERS 62
TABLE 38: MICROPROCESSOR REGISTER 0X81H, BIT DESCRIPTION 63
TABLE 39: MICROPROCESSOR REGISTER 0X82H BIT DESCRIPTION 64
TABLE 40: MICROPROCESSOR REGISTER 0X83H BIT DESCRIPTION 64
TABLE 41: MICROPROCESSOR REGISTER 0X8CH BIT DESCRIPTION 65
TABLE 42: MICROPROCESSOR REGISTER 0X8DH BIT DESCRIPTION 65
TABLE 43: MICROPROCESSOR REGISTER 0X8EH BIT DESCRIPTION 66
TABLE 44: MICROPROCESSOR REGISTER 0XC0H BIT DESCRIPTION 67
TABLE 45: MICROPROCESSOR REGISTER 0XFEH BIT DESCRIPTION 67
TABLE 46: MICROPROCESSOR REGISTER 0XFFH BIT DESCRIPTION 67
7.0 ELECTRICAL CHARACTERISTICS 68
TABLE 47: ABSOLUTE MAXIMUM RATINGS 68
TABLE 48: DC DIGITAL INPUT AND OUTPUT ELECTRICAL CHARACTERISTICS 68
TABLE 49: AC ELECTRICAL CHARACTERISTICS 68
TABLE 50: POWER CONSUMPTION 69
TABLE 51: E1 RECEIVER ELECTRICAL CHARACTERISTICS 69
TABLE 52: T1 RECEIVER ELECTRICAL CHARACTERISTICS 70
TABLE 53: E1 TRANSMITTER ELECTRICAL CHARACTERISTICS 70
TABLE 54: T1 TRANSMITTER ELECTRICAL CHARACTERISTICS 71
PACKAGE DIMENSIONS 72
225 BALL PLASTIC BALL GRID ARRAY (BOTTOM VIEW) 72
(19.0 X 19.0 X 1.0MM) 72
ORDERING INFORMATION(1) 73
2. VISIT WWW.EXAR.COM FOR ADDITIONAL INFORMATION ON ENVIRONMENTAL RATING. 73

The product (or products) mentioned in this data sheet is no longer being manufactured and may not be ordered (OBS)

PIN DESCRIPTION BY FUNCTION

RECEIVE SECTION

Signal Name	BGA Lead #	Type	Description
RXON	K16	I	**Receiver On** Hardware Mode Only This pin is used to enable the receivers for all channels. By default, the receivers are turned ON in hardware mode. To turn the receivers OFF, pull this pin "Low". ***Note:*** *Internally pulled "High" with a 50kΩ resistor.*
RLOS0 RLOS1 RLOS2 RLOS3 RLOS4 RLOS5 RLOS6 RLOS7	C3 H4 H15 A16 V3 L2 J15 T15	O	**Receive Loss of Signal** When a receive loss of signal occurs according to ITU-T G.775, the RLOS pin will go "High" for a minimum of one RCLK cycle. RLOS will remain "High" until the loss of signal condition clears. See the Receive Loss of Signal section of this datasheet for more details. ***Note:*** *This pin can be used for redundancy applications to initiate an automatic switch to a backup card.*
RCLK0 RCLK1 RCLK2 RCLK3 RCLK4 RCLK5 RCLK6 RCLK7	B3 H3 H16 A17 U3 L3 M15 U16	O	**Receive Clock Output** RCLK is the recovered clock from the incoming data stream. If the incoming signal is absent or RTIP/RRING are in "High-Z", RCLK maintains its timing by using an internal master clock as its reference. RPOS/RNEG data can be updated on either edge of RCLK selected by RCLKE. ***Note:*** *RCLKE is a global setting that applies to all 8 channels.*
RNEG/LCV0 RNEG/LCV1 RNEG/LCV2 RNEG/LCV3 RNEG/LCV4 RNEG/LCV5 RNEG/LCV6 RNEG/LCV7	A2 H2 H18 B16 T4 M4 M16 V17	O	**RNEG/LCV_OF Output** In dual rail mode, this pin is the receive negative data output. In single rail mode, this pin is a Line Code Violation / Overflow indicator Indicator. If LCV is selected by software and if a line code violation, a bi-polar violation, or excessive zeros occur, the LCV_OF pin will pull "High" for a minimum of one RCLK cycle. LCV_OF will remain "High" until there are no more violations. However, if OF (Overflow) is selected, then the LCV_OF pin will pull "High" if the internal LCV counter is saturated. The LCV_OF pin will remain "High" until the LCV counter is reset.
RPOS0 RPOS1 RPOS2 RPOS3 RPOS4 RPOS5 RPOS6 RPOS7	B2 G2 D15 B17 U2 M3 L17 T17	O	**RPOS/RDATA Output** Receive digital output pin. In dual rail mode, this pin is the receive positive data output. In single rail mode, this pin is the receive non-return to zero (NRZ) data output.

The product (or products) mentioned in this data sheet are no longer being manufactured and may not be ordered (obsolete)

SIGNAL NAME	BGA LEAD #	TYPE	DESCRIPTION
RTIP0 RTIP1 RTIP2 RTIP3 RTIP4 RTIP5 RTIP6 RTIP7	C1 G1 G18 C18 U1 L1 L18 T18	I	**Receive Differential Tip Input** RTIP is the positive differential input from the line interface. Along with the RRING signal, these pins should be coupled to a 1:1 transformer for proper operation.
RRING0 RRING1 RRING2 RRING3 RRING4 RRING5 RRING6 RRING7	D1 F1 F18 D18 T1 M1 M18 R18	I	**Receive Differential Ring Input** RRING is the negative differential input from the line interface. Along with the RTIP-signal, these pins should be coupled to a 1:1 transformer for proper operation.
RXMUTE	T12	I	**Receive Data Muting** Hardware Mode Only This pin is AND-ed with each of the RLOS functions on a per channel basis. Therefore, if this pin is pulled "High" and a given channel experiences a loss of signal, then the RPOS/RNEG output pins are automatically pulled "Low" to prevent data chattering. To disable this feature, the RxMUTE pin must be pulled "Low". ***NOTE:*** *This pin is internally pulled "High" with a 50kΩ resistor*
RXRES1 RXRES0	R10 V10	I	**Receive External Resistor Control Pins** Hardware mode Only These pins are used in the Receive Internal Impedance mode for unique applications where an accurate resistor can be used to achieve optimal return loss. When RxRES[1:0] are used, the LIU automatically sets the internal impedance to match the line build out. For example: if 240Ω is selected, the LIU chooses an internal impedance such that the parallel combination equals the impedance chosen by TERSEL[1:0]. "00" = No External Fixed Resistor "01" = 240Ω "10" = 210Ω "11" = 150Ω ***NOTE:*** *These pins are internally pulled "Low" with a 50kΩ resistor. This feature is available in Host mode by programming the appropriate channel register.*
RCLKE/ µPTS1	J16	I	**Receive Clock Edge** Hardware Mode This pin is used to select which edge of the recovered clock is used to update data to the receiver on the RPOS/RNEG outputs. By default, data is updated on the risinge edge. To udpdate data on the falling edge, this pin must be pulled "High". Host Mode µPTS[2:1] pins are used to select the type of microprocessor to be used for Host communication. "00" = 8051 Intel Asynchronous "01" = 68K Motorola Asynchronous ***NOTE:*** *This pin is internally pulled "Low" with a 50kΩ resistor.*

The product (or products) mentioned in this data sheet are no longer being manufactured and may not be ordered (OBS)

TRANSMIT SECTION

Signal Name	BGA Lead #	Type	Description
TCLKE/µPTS2	L15	I	**Transmit Clock Edge** Hardware Mode This pin is used to select which edge of the transmit clock is used to sample data on the transmitter on the TPOS/TNEG inputs. By default, data is sampled on the falling edge. To sample data on the rising edge, this pin must be pulled "High". Host Mode µPTS[2:1] pins are used to select the type of microprocessor to be used for Host communication. "00" = 8051 Intel Asynchronous "01" = 68K Motorola Asynchronous ***Note:*** *This pin is internally pulled "Low" with a 50kΩ resistor.*
TTIP0 TTIP1 TTIP2 TTIP3 TTIP4 TTIP5 TTIP6 TTIP7	E3 G4 F17 C16 R2 N2 N16 P16	O	**Transmit Differential Tip Output** TTIP is the positive differential output to the line interface. Along with the TRING signal, these pins should be coupled to a 1:2 step up transformer for proper operation.
TRING0 TRING1 TRING2 TRING3 TRING4 TRING5 TRING6 TRING7	E2 F3 F15 E16 P2 N4 R15 P17	O	**Transmit Differential Ring Output** TRING is the negative differential output to the line interface. Along with the TTIP signal, these pins should be coupled to a 1:2 step up transformer for proper operation.
TPOS0 TPOS1 TPOS2 TPOS3 TPOS4 TPOS5 TPOS6 TPOS7	C5 A4 B14 D14 V4 U5 V15 T14	I	**TPOS/TDATA Input** Transmit digital input pin. In dual rail mode, this pin is the transmit positive data input. In single rail mode, this pin is the transmit non-return to zero (NRZ) data input. ***Note:*** *Internally pulled "Low" with a 50KΩ resistor.*
TNEG0 TNEG1 TNEG2 TNEG3 TNEG4 TNEG5 TNEG6 TNEG7	C4 B5 D13 B15 U4 V5 U14 R14	I	**Transmitter Negative NRZ Data Input** In dual rail mode, this signal is the negative-rail input data for the transmitter. In single rail mode, this pin can be left unconnected while in Host mode. However, in Hardware mode, this pin is used to select the type of encoding/decoding for the E1/T1 data format. Connecting this pin "Low" enables HDB3 in E1 or B8ZS in T1. Connecting this pin "High" selects AMI data format. ***Note:*** *Internally pulled "Low" with a 50kΩ resistor.*

The Product (or products) mentioned in this data sheet are no longer being manufactured and may not be ordered (OBS)

SIGNAL NAME	BGA LEAD #	TYPE	DESCRIPTION
TCLK0 TCLK1 TCLK2 TCLK3 TCLK4 TCLK5 TCLK6 TCLK7	B4 A3 A15 C14 T3 T5 V16 U15	I	**Transmit Clock Input** TCLK is the input facility clock used to sample the incoming TPOS/TNEG data. If TCLK is absent, pulled "Low", or pulled "High", the transmitter outputs at TTIP/TRING sends an all zero signal to the line. TPOS/TNEG data can be sampled on either edge of TCLK selected by TCLKE. ***NOTE:*** *1. TCLKE is a global setting that applies to all 8 channels.* ***NOTE:*** *2. Internally pulled "Low" with a 50kΩ resistor.*
TAOS0 TAOS1 TAOS2 TAOS3 TAOS4 TAOS5 TAOS6 TAOS7	D6 B6 A5 C6 T6 U6 V6 R6	I	**Transmit All Ones for Channel** Hardware Mode Only Setting this pin "High" enables the transmission of an all ones pattern to the line from TTIP/TRING. If this pin is pulled "Low", the transmitters operate in normal throughput mode. ***NOTE:*** *Internally pulled "Low" with a 50kΩ resistor for all channels. This feature is available in Host mode by programming the appropriate channel register.*
TXON0 TXON1 TXON2 TXON3 TXON4 TXON5 TXON6 TXON7	A13 D12 C12 B12 V13 U13 R12 R13	I	**Transmit On/Off Input** Upon power up, the transmitters are powered off. Turning the transmitters On or Off is selected through the microprocessor interface by software control while in Host mode. However, if TxONCNTL is set "High" in software, or if in Hardware mode, the activity of the transmitter outputs is controlled by the TxON pins. ***NOTE:*** *TxON is ideal for redundancy applications. See the Redundancy Applications Section of this datasheet for more details. Internally pulled "Low" with a 50KΩ resistor.*

The product (or products) mentioned in this data sheet are no longer being manufactured and may not be ordered (OBS)

PARALLEL MICROPROCESSOR INTERFACE

SIGNAL NAME	BGA LEAD #	TYPE	DESCRIPTION
HW/$\overline{\text{HOST}}$	T10	I	**Mode Control Input** This pin is used to select Host mode or Hardware mode. By default, the LIU is set in Hardware mode. To use Host mode, this pin must be pulled "Low". ***NOTE:*** *Internally pulled "High" with a 50kΩ resistor.*
$\overline{\text{WR}}$_R/$\overline{\text{W}}$/EQC0	D7	I	**Write Input(R/$\overline{\text{W}}$)/Equalizer Control Signal 0** Host Mode This pin is used to communicate a Read or Write operation according to the which microprocessor is chosen. See the Microprocessor Section of this datasheet for details. Hardware Mode EQC[4:0] are used to set the Receiver Gain, Receiver Impedance and the Transmit Line Build Out. See **Table 22** for more details. ***NOTE:*** *Internally pulled "Low" with a 50kΩ resistor.*
$\overline{\text{RD}}$_DS/EQC1	C7	I	**Read Input (Data Strobe)/Equalizer Control Signal 1** Host Mode This pin is used to communicate a Read or Write operation according to the which microprocessor is chosen. See the Microprocessor Section of this datasheet for details. Hardware Mode EQC[4:0] are used to set the Receiver Gain, Receiver Impedance and the Transmit Line Build Out. See **Table 22** for more details. ***NOTE:*** *Internally pulled "Low" with a 50kΩ resistor.*
ALE/EQC2	A7	I	**Address Latch Input (Address Strobe)** Host Mode This pin is used to latch the address contents into the internal registers within the LIU device. See the Microprocessor Section of this datasheet for details. Hardware Mode EQC[4:0] are used to set the Receiver Gain, Receiver Impedance and the Transmit Line Build Out. See **Table 22** for more details. ***NOTE:*** *Internally pulled "Low" with a 50kΩ resistor.*
$\overline{\text{CS}}$/EQC3	B7	I	**Chip Select Input - Host mode:** Host Mode This pin is used to initiate communication with the microprocessor interface. See the Microprocessor Section of this datasheet for details. Hardware Mode EQC[4:0] are used to set the Receiver Gain, Receiver Impedance and the Transmit Line Build Out. See **Table 22** for more details. ***NOTE:*** *Internally pulled "Low" with a 50kΩ resistor.*

The product(s) mentioned in this data sheet are no longer being manufactured and may not be ordered (OBS)

SIGNAL NAME	BGA LEAD #	TYPE	DESCRIPTION
$\overline{\text{RDY}}$/EQC4	A6	I/O	**Ready Output (Data Transfer Acknowledge)** Host Mode (Parallel Microprocessor) If Pin SER_$\overline{\text{PAR}}$ is pulled "Low", this output pin from the microprocessor block is used to inform the local µP that the Read or Write operation has been completed and is waiting for the next command. See the Microprocessor Section of this datasheet for details. Hardware Mode EQC[4:0] are used to set the Receiver Gain, Receiver Impedance and the Transmit Line Build Out. See **Table 22** for more details. ***NOTE:*** *Internally pulled "Low" with a 50kΩ resistor.*
D[7]/Loop14 D[6]/Loop04 D[5]/Loop15 D[4]/Loop05 D[3]/Loop16 D[2]/Loop06 D[1]/Loop17 D[0]/Loop07	T7 U7 V7 V8 V9 U8 U9 R7	I/O	**Bi-Directional Data Bust/Loopback Mode Select** Host Mode These pins are used for the 8-bit bi-directional data bus to allow data transfer to and from the microprocessor interface. Hardware Mode (Channels 4 through 7) These pins are used to select the loopback mode. Each channel has two loopback pins Loop[1:0]. "00" = No Loopback "01" = Analog Local Loopback "10" = Remote Loopback "11" = Digital Loopback ***NOTE:*** *Internally pulled "Low" with a 50kΩ resistor.*
A[7]/Loop13 A[6]/Loop03 A[5]/Loop12 A[4]/Loop02 A[3]/Loop11 A[2]/Loop01 A[1]/Loop10 A[0]/Loop00	A12 B11 C11 D11 A11 B10 A10 C10	I	**Direct Address Bus/Loopback Mode Select** Host Mode These pins are used for the 8-bit direct address bus to allow access to the internal registers within the microprocessor interface. Hardware Mode (Channels 0 through 3) These pins are used to select the loopback mode. Each channel has two loopback pins Loop[1:0]. "00" = No Loopback "01" = Analog Local Loopback "10" = Remote Loopback "11" = Digital Loopback ***NOTE:*** *Internally pulled "Low" with a 50kΩ resistor.*

The product(s) mentioned in this data sheet are no longer being manufactured and may not be ordered (OBS)

Signal Name	BGA Lead #	Type	Description
ATAOS	T13	I	**Synchronous Microprocessor Clock/Automatic Transmit All Ones** Hardware Mode This pin is used select an all ones signal to the line interface through TTIP/TRING any time that a loss of signal occurs. This feature is avaiable in Host mode by programming the appropriate global register. ***Note:*** *Internally pulled "Low" with a 50kΩ resistor.*
$\overline{\text{INT}}$	L16	O	**Interrupt Output** Host Mode This signal is asserted "Low" when a change in alarm status occurs. Once the status registers have been read, the interrupt pin will return "High". GIE (Global Interrupt Enable) must be set "High" in the appropriate global register to enable interrupt generation. ***Notes:*** *1. This pin is an open-drain output that requires an external 10KΩ pull-up resistor.* *2. This pin has an internal PULL-DOWN 50kΩ resistor*

JITTER ATTENUATOR

Signal Name	BGA Lead #	Type	Description
JASEL0 JASEL1	A14 B13	I	**Jitter Attenuator Select Pins Hardware Mode** JASEL[1:0] pins are used to place the jitter attenuator in the transmit path, the receive path or to disable it. JASEL1 / JASEL0 / JA Path / JA BW Hz (T1, E1) / FIFO Size 0 / 0 / Disabled / ---- / ---- / -------- 0 / 1 / Transmit / 3 / 10 / 32/32 1 / 0 / Receive / 3 / 10 / 32/32 1 / 1 / Receive / 3 / 1.5 / 64/64 ***Note:*** *These pins are internally pulled "Low" with 50kΩ resistors.*

CLOCK SYNTHESIZER

Signal Name	BGA Lead #	Type	Description
MCLKOUT	H1	O	**Synthesized Master Clock Output** This signal is the output of the Master Clock Synthesizer PLL which is at T1 or E1 rate based upon the mode of operation.
MCLKT1	K1	I	**T1 Master Clock Input** This signal is an independent 1.544MHz clock for T1 systems with accuracy better than ±50ppm and duty cycle within 40% to 60%. MCLKT1 is used in the T1 mode. ***Note:*** *All channels must operate at the same clock rate, either T1, E1 or J1. This pin is internally pulled "Low" with a 50kΩ resistor.*

The product (or product) mentioned in this data sheet are no longer being manufactured and may not be ordered (OBS)

SIGNAL NAME	BGA LEAD #	TYPE	DESCRIPTION
MCLKE1	J1	I	**E1 Master Clock Input** A 2.048MHz clock for with an accuracy of better than ±50ppm and a duty cycle of 40% to 60% can be provided at this pin. In systems that have only one master clock source available (E1 or T1), that clock should be connected to both MCLKE1 and MCLKT1 inputs for proper operation. ***NOTE:*** *All channels of the XRT83VSH38 must be operated at the same clock rate, either T1, E1 or J1. This pin is internally pulled "Low" with a 50kΩ resistor.*
CLKSEL0 CLKSEL1 CLKSEL2	A8 B8 C8	I	**Clock Select inputs for Master Clock Synthesizer** Hardware Mode Only CLKSEL[2:0] are input signals to a programmable frequency synthesizer that can be used to generate a master clock from an external accurate clock source according to the table below. MCLKRATE is automatically generated from the state of the EQC[4:0] pins.

MCLKE1 kHz	MCLKT1 kHz	CLKSEL2	CLKSEL1	CLKSEL0	MCLKRATE	CLKOUT/ kHz
2048	2048	0	0	0	0	2048
2048	2048	0	0	0	1	1544
2048	1544	0	0	0	0	2048
1544	1544	0	0	1	1	1544
1544	1544	0	0	1	0	2048
2048	1544	0	0	1	1	1544

NOTE: *These pins are internally pulled "Low" with a 50kΩ resistor.*

The product (s) mentioned in this data sheet are no longer being manufactured and may not be ordered (OBS)

ALARM FUNCTIONS/REDUNDANCY SUPPORT

Signal Name	BGA Lead #	Type	Description
GAUGE	J18	I	**Twisted Pair Cable Wire Gauge Select** Hardware Mode Only This pin is used to match the frequency characteristics according to the gauge of wire used in Telecom circuits. By default, the LIU is matched to 22 gauge or 24 gauge wire. To select 26 gauge, this pin must be pulled "High". ***Note:*** *Internally pulled "Low" with a 50kΩ resistor.*
DMO0 DMO1 DMO2 DMO3 DMO4 DMO5 DMO6 DMO7	D5 D4 C15 C13 R5 P4 U17 V14	O	**Digital Monitor Output** When no transmit output pulse is detected for more than 128 TCLK cycles within the transmit output buffer, the DMO pin will go "High" for a minimum of one TCLK cycle. DMO will remain "High" until the transmitter sends a valid pulse. ***Note:*** *This pin can be used for redundancy applications to initiate an automatic switch to a backup card.*
$\overline{\text{RESET}}$	T8	I	**Hardware Reset Input** Active low signal. When this pin is pulled "Low" for more than 10µS, the internal registers are set to their default state. See the register description for the default values. ***Note:*** *Internally pulled "High" with a 50KΩ resistor.*
SR/$\overline{\text{DR}}$	K4	I	**Single-Rail/Dual-Rail Data Format** Hardware Mode Only This pin is used to control the data format on the facility side of the LIU to interface to a Framer or Mapper/ASIC device. By default, dual rail mode is selected which relies upon the Framer to handle the encoding/decoding functions. To select single rail mode, this pin must be pulled "High". If single rail mode is selected, the LIU can encode/decode AMI or B8ZS/HDB3 data formats. ***Note:*** *Internally pulled "Low" with a 50kΩ resistor.*
RXTSEL	U11	I	**Receiver Termination Select** Hardware Mode This pin is used to select between the internal and external impedance modes for the receive path. By default, the receivers are configured for external impedance mode, which is ideal for redundancy applications without relays. To select internal impedance, this pin must be pulled "HIgh". Host Mode Internal/External impedance can be selected by programming the appropriate channel registers. However, to assist in redundancy applications, this pin can be used for a hard switch if the RxTCNTL bit is set "High" in the appropriate global register. If RxTCNTL is set "High", the individual RxTSEL register bits are ignored. ***Note:*** *This pin is internally pulled "Low" with a 50kΩ resistor.*
TXTSEL	V11	I	**Transmitter Termination Select** Hardware Mode This pin is used to select between the internal and external impedance modes for the transmit path. By default, the receivers are configured for external impedance mode, which is ideal for redundancy applications without relays. To select internal impedance, this pin must be pulled "HIgh". ***Note:*** *This pin is internally pulled "Low".*

The product(s) mentioned in this data sheet are no longer being manufactured and may not be ordered (OBS)

SIGNAL NAME	BGA LEAD #	TYPE	DESCRIPTION
TERSEL1 TERSEL0	T11 R11	I	**Termination Impedance Select** Hardware Mode Only The TERSEL[1:0] pins are used to select the transmitter and receiver impedance. By default, the impedance is set to 100Ω. "00" = 100Ω "01" = 110Ω "10" = 75Ω "11" = 120Ω ***NOTE:*** *These pins are internally pulled "Low" with a 50kΩ resistor.*
TEST	U12	I	**Factory Test Mode** For normal operation, the TEST pin should be tied to ground. ***NOTE:*** *Internally pulled "Low" with a 50kΩ resistor.*
$\overline{ICT}$	V12	I	**In Circuit Testing** When this pin is tied "Low", all output pins are forced to "High" impedance for in circuit testing. ***NOTE:*** *Internally pulled "High" with a 50KΩ resistor.*

The product (or products) mentioned in this data sheet are no longer being manufactured and may not be ordered (OBS)

SERIAL MICROPROCESSOR INTERFACE

SIGNAL NAME	BGA LEAD #	TYPE	DESCRIPTION
SER_$\overline{\text{PAR}}$	P18	I	**Serial/Parallel Select Input (Host Mode Only)** This pin is used in the Host mode to select between the parallel microprocessor or serial interface. By default, the Host mode operates in the parallel microprocessor mode. To configure the device for a serial interface, this pin must be pulled "HIgh". ***NOTE:*** *Internally pulled "Low" with a 50kΩ resistor.*
SCLK	T13	I	**Serial Clock Input (Host Mode Only)** If Pin SER_$\overline{\text{PAR}}$ is pulled "High", this input pin is used the timing reference for the serial microprocessor interface. See the Microprocessor Section of this datasheet for details.
SDI	C10	I	**Serial Data Input (Host Mode Only)** If Pin SER_$\overline{\text{PAR}}$ is pulled "High", this input pin from the serial interface is used to input the serial data for Read and Write operations. See the Microprocessor Section of this datasheet for details.
SDO	R7	O	**Serial Data Output (Host Mode Only)** If Pin SER_$\overline{\text{PAR}}$ is pulled "High", this output pin from the serial interface is used to read back the regsiter contents. See the Microprocessor Section of this datasheet for details.
ATP-Tip ATP-Ring	E18 B18		**Analog JTAG Positive Pin** **Analog JTAG Negative Pin**
TDO	B1		**Test Data Out** This pin is used as the output data pin for the boundary scan chain.
TDI	R1		**Test Data In** This pin is used as the input data pin for the boundary scan chain. ***NOTE:*** *Internally pulled "High" with a 50kΩ resistor.*
TCK	N1		**Test Clock Input** This pin is used as the input clock source for the boundary scan chain. ***NOTE:*** *Internally pulled "High" with a 50kΩ resistor.*
TMS	E1		**Test Mode Select** This pin is used as the input mode select for the boundary scan chain. ***NOTE:*** *Internally pulled "High" with a 50kΩ resistor.*
SENSE	N18	****	**Factory Test Pin**

The product(s) mentioned in this data sheet are no longer being manufactured and may not be ordered (OBS)

POWER AND GROUND

SIGNAL NAME	BGA LEAD #	TYPE	DESCRIPTION
TGND	D3 F2 E15 C17 R3 P3 T16 R16	****	**Transmitter Analog Ground** It's recommended that all ground pins of this device be tied together.
TVDD	E4 F4 F16 E17 R4 P1 N15 P15	****	**Transmit Analog Power Supply (3.3V ±5%)** TVDD can be shared with DVDD. However, it is recommended that TVDD be isolated from the analog power supply RVDD. For best results, use an internal power plane for isolation. If an internal power plane is not available, a ferrite bead can be used. Each power supply pin should be bypassed to ground through an external 0.1µF capacitor.
RVDD	C2 E5 G16 D16 V2 N3 N17 U18	****	**Receive Analog Power Supply (3.3V ±5%)** RVDD should not be shared with other power supplies. It is recommended that RVDD be isolated from the digital power supply DVDD and the analog power supply TVDD. For best results, use an internal power plane for isolation. If an internal power plane is not available, a ferrite bead can be used. Each power supply pin should be bypassed to ground through an external 0.1µF capacitor.
RGND	D2 G3 G17 D17 T2 M2 M17 R17	****	**Receiver Analog Ground** It's recommended that all ground pins of this device be tied together.
AVDD-Bias	K17 J3 J2	****	**Analog Power Supply (1.8V ±5%)** AVDD should be isolated from the digital power supplies. For best results, use an internal power plane for isolation. If an internal power plane is not available, a ferrite bead can be used. Each power supply pin should be bypassed to ground through at least one 0.1µF capacitor.
AGND	J17 K3 L4	****	**Analog Ground** It's recommended that all ground pins of this device be tied together.

The product (or products) mentioned in this data sheet are no longer being manufactured and may not be ordered (OBS)

Signal Name	BGA Lead #	Type	Description
DVDD3v3	A18 R9 D9 K15 J4	****	**Digital Power Supply (3.3V ±5%)** DVDD should be isolated from the analog power supplies. For best results, use an internal power plane for isolation. If an internal power plane is not available, a ferrite bead can be used. Every two DVDD power supply pins should be bypassed to ground through at least one 0.1µF capacitor.
DVDD1v8	V1 U10 K18 D10 A9	****	**Digital Power Supply (1.8V ±5%)** DVDD should be isolated from the analog power supplies. For best results, use an internal power plane for isolation. If an internal power plane is not available, a ferrite bead can be used. Every two DVDD power supply pins should be bypassed to ground through at least one 0.1µF capacitor. ***Note:*** *For proper operation, the power-up sequence is: bring up 1.8V power befor the 3.3V.*
DGND	A1 R8 T9 H17 B9 D8 C9 G15 K2 V18	****	**Digital Ground** It's recommended that all ground pins of this device be tied together.

The product (or products) mentioned in this data sheet are no longer being manufactured and may not be ordered (OBS)

FUNCTIONAL DESCRIPTION

The XRT83VSH38 is a fully integrated 8-channel short-haul line interface unit (LIU) that operates from a 1.8V and a 3.3V power supply. Using internal termination, the LIU provides one bill of materials to operate in T1, E1, or J1 mode with minimum external components. The LIU features are programmed through a standard microprocessor interface or controlled through Hardware mode. EXAR's LIU has patented high impedance circuits that allow the transmitter outputs and receiver inputs to be high impedance when experiencing a power failure or when the LIU is powered off. Key design features within the LIU optimize 1:1 or 1+1 redundancy and non-intrusive monitoring applications to ensure reliability without using relays. The on-chip clock synthesizer generates T1/E1/J1 clock rates from a selectable external clock frequency and outputs a clock reference of the line rate chosen. Additional features include RLOS, a 16-bit LCV counter for each channel, AIS, QRSS generation/detection, Network Loop Code generation/detection, TAOS, DMO, and diagnostic loopback modes.

1.0 HARDWARE MODE VS HOST MODE

The LIU supports a parallel or serial microprocessor interface (Host mode) for programming the internal features, or a Hardware mode that can be used to configure the device.

1.1 Feature Differences in Hardware Mode

Some features within the Hardware mode are not supported on a per channel basis. The differences between Hardware mode and Host mode are descibed below in **Table 1**.

The product(s) mentioned in this data sheet are no longer being manufactured and may not be ordered (OBS)

TABLE 1: DIFFERENCES BETWEEN HARDWARE MODE AND HOST MODE

FEATURE	HOST MODE	HARDWARE MODE
Tx Test Patterns	Fully Supported	QRSS diagnostic patterns are not available in Hardware mode. The TAOS feature is available.
RxRES[1:0]	Per Channel	In Hardware mode, RxRES[1:0] is a global setting that applies to all channels.
TERSEL[1:0]	Per Channel	In Hardware mode, TERSEL[1:0] is a global setting that applies to all channels.
EQC[4:0]	Per Channel	In Hardware mode, the EQC[4:0] is a global setting that applies to all channels. ***NOTE:*** *In Host mode, all channels have to operate at one line rate T1 or E1, however each channel can have an individual line build out.*
Dual Loopback	Fully Supported	In Hardware mode, dual loopback mode is not supported. Remote, Analog local, and digital loopback modes are available.
JASEL[1:0]	Per Channel	In Hardware mode, the jitter attenuator selection is a global setting that applies to all channels.
RxTSEL	Per Channel	In Hardware mode, the receive termination select is a global setting that applies to all channels.
TxTSEL	Per Channel	In Hardware mode, the transmit termination select is a global setting that applies to all channels.

2.0 MASTER CLOCK GENERATOR

Using external clock sources, the on-chip frequency synthesizer generates the T1 (1.544MHz) or E1 (2.048MHz) master clocks necessary for the transmit pulse shaping and receive clock recovery circuit. There are two master clock inputs MCLKE1 and MCLKT1. In systems where both T1 and E1 master clocks are available these clocks can be connected to the respective pins. All channels of a given XRT83VSH38 must be operated at the same clock rate, either T1, E1 or J1 modes. In systems that have only one master clock source available (E1 or T1), that clock should be connected to both MCLKE1 and MCLKT1 inputs for proper operation.

FIGURE 3. TWO INPUT CLOCK SOURCE

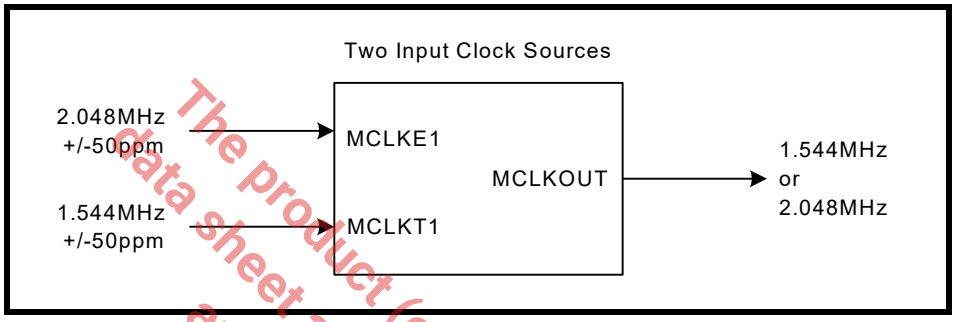

FIGURE 4. ONE INPUT CLOCK SOURCE

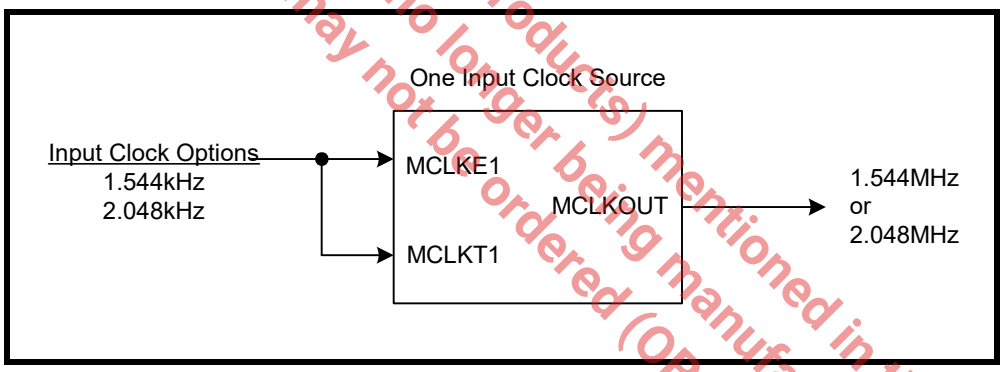

The product (or products) mentioned in this data sheet are no longer being manufactured and may not be ordered (OBS)

TABLE 2: MASTER CLOCK GENERATOR

MCLKE1 kHz	MCLKT1 kHz	CLKSEL2	CLKSEL1	CLKSEL0	MCLKRATE	MASTER CLOCK kHz
2048	2048	0	0	0	0	2048
2048	2048	0	0	0	1	1544
2048	1544	0	0	0	0	2048
1544	1544	0	0	1	1	1544
1544	1544	0	0	1	0	2048
2048	1544	0	0	1	1	1544

3.0 RECEIVE PATH LINE INTERFACE

The receive path of the XRT83VSH38 LIU consists of 8 independent T1/E1/J1 receivers. The following section describes the complete receive path from RTIP/RRING inputs to RCLK/RPOS/RNEG outputs. A simplified block diagram of the receive path is shown in **Figure 5**.

FIGURE 5. SIMPLIFIED BLOCK DIAGRAM OF THE RECEIVE PATH

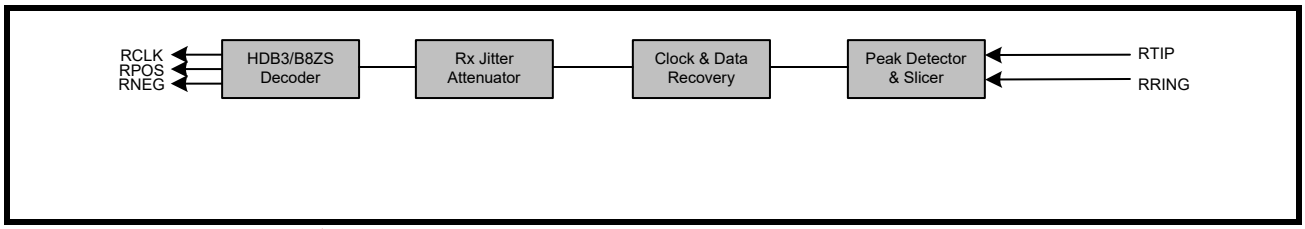

3.1 Line Termination (RTIP/RRING)

3.1.1 CASE 1: Internal Termination

The input stage of the receive path accepts standard T1/E1/J1 twisted pair or E1 coaxial cable inputs through RTIP and RRING. The physical interface is optimized by placing the terminating impedance inside the LIU. This allows one bill of materials for all modes of operation reducing the number of external components necessary in system design. The receive termination impedance is selected by programming TERSEL[1:0] to match the line impedance. Selecting the internal impedance is shown in **Table 3**.

The product(s) mentioned in this data sheet are no longer being manufactured and may not be ordered (OBS)

TABLE 3: SELECTING THE INTERNAL IMPEDANCE

TERSEL[1:0]	RECEIVE TERMINATION
0h (00)	100Ω
1h (01)	110Ω
2h (10)	75Ω
3h (11)	120Ω

The XRT83VSH38 has the ability to switch the internal termination to "High" impedance by programming RxTSEL in the appropriate channel register. For internal termination, set RxTSEL to "1". By default, RxTSEL is set to "0" ("High" impedance). For redundancy applications, a dedicated hardware pin (RxTSEL) is also available to control the receive termination for all channels simultaneously. This hardware pin takes priority over the register setting if RxTCNTL is set to "1" in the appropriate global register. If RxTCNTL is set to "0", the state of this pin is ignored. See **Figure 6** for a typical connection diagram using the internal termination.

FIGURE 6. TYPICAL CONNECTION DIAGRAM USING INTERNAL TERMINATION

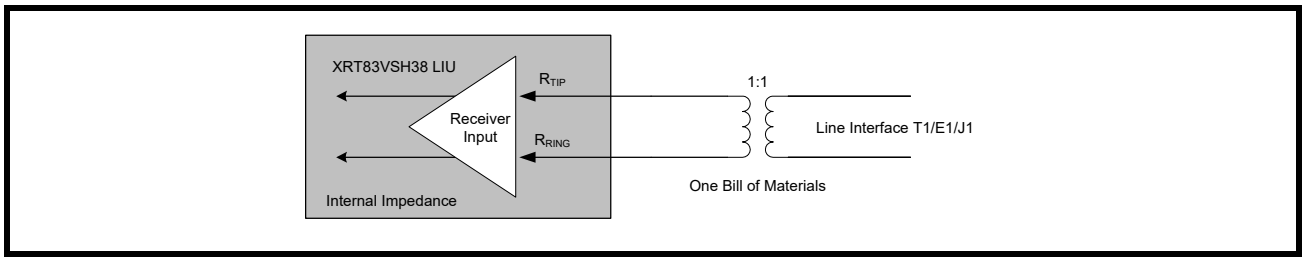

3.1.2 CASE 2: Internal Termination With One External Fixed Resistor for All Modes

Along with the internal termination, a high precision external fixed resistor can be used to optimize the return loss. This external resistor can be used for all modes of operation ensuring one bill of materials. There are three resistor values that can be used by setting the RxRES[1:0] bits in the appropriate channel register. Selecting the value for the external fixed resistor is shown in **Table 4**.

TABLE 4: SELECTING THE VALUE OF THE EXTERNAL FIXED RESISTOR

RxRES[1:0]	EXTERNAL FIXED RESISTOR
0h (00)	None
1h (01)	240Ω
2h (10)	210Ω
3h (11)	150Ω

By default, RxRES[1:0] is set to "None" for no external fixed resistor. If an external fixed resistor is used, the XRT83VSH38 uses the parallel combination of the external fixed resistor and the internal termination as the input impedance. See **Figure 7** for a typical connection diagram using the external fixed resistor.

NOTE: *Without the external resistor, the XRT83VSH38 meets all return loss specifications. This mode was created to add flexibility for optimizing return loss by using a high precision external resistor.*

FIGURE 7. TYPICAL CONNECTION DIAGRAM USING ONE EXTERNAL FIXED RESISTOR

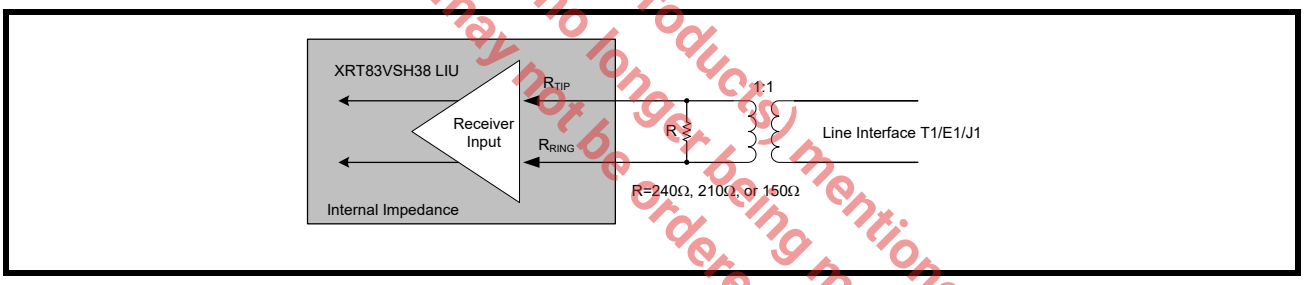

The product(s) mentioned in this data sheet are no longer being manufactured and may not be ordered (OBS)

3.2 *Clock and Data Recovery*

The receive clock (RCLK) is recovered by the clock and data recovery circuitry. An internal PLL locks on the incoming data stream and outputs a clock that's in phase with the incoming signal. This allows for multi-channel T1/E1/J1 signals to arrive from different timing sources and remain independent. In the absence of an incoming signal, RCLK maintains its timing by using the internal master clock as its reference. The recovered data can be updated on either edge of RCLK. By default, data is updated on the rising edge of RCLK. To update data on the falling edge of RCLK, set RCLKE to "1" in the appropriate global register. **Figure 8** is a timing diagram of the receive data updated on the rising edge of RCLK. **Figure 9** is a timing diagram of the receive data updated on the falling edge of RCLK. The timing specifications are shown in **Table 5**.

FIGURE 8. RECEIVE DATA UPDATED ON THE RISING EDGE OF RCLK

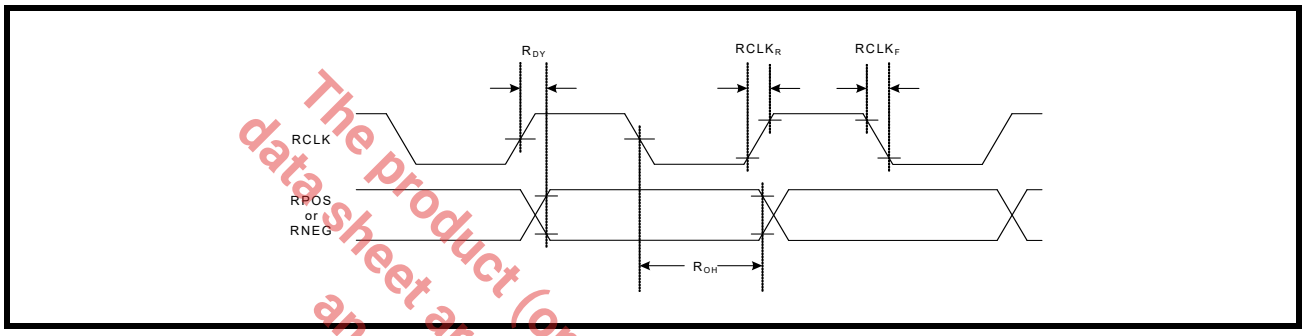

FIGURE 9. RECEIVE DATA UPDATED ON THE FALLING EDGE OF RCLK

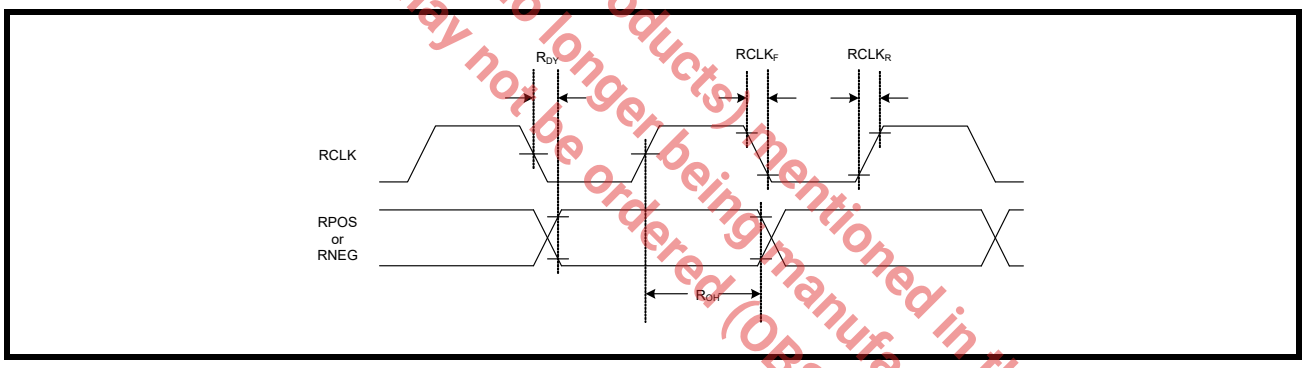

The product (or products) mentioned in this datasheet are no longer being manufactured and may not be ordered (OBS)

TABLE 5: TIMING SPECIFICATIONS FOR RCLK/RPOS/RNEG

PARAMETER	SYMBOL	MIN	TYP	MAX	UNITS
RCLK Duty Cycle	R_{CDU}	45	50	55	%
Receive Data Setup Time	R_{SU}	150	-	-	ns
Receive Data Hold Time	R_{HO}	150	-	-	ns
RCLK to Data Delay	R_{DY}	-	-	40	ns
RCLK Rise Time (10% to 90%) with 25pF Loading	$RCLK_R$	-	-	40	ns
RCLK Fall Time (90% to 10%) with 25pF Loading	$RCLK_F$	-	-	40	ns

NOTE: *VDD=3.3V ±5%, T_A=25°C, Unless Otherwise Specified*

3.2.1 Receive Sensitivity

To meet short haul requirements, the XRT83VSH38 can accept T1/E1/J1 signals that have been attenuated by 12dB of flat loss in E1 mode or by 655 feet of cable loss along with 6dB of flat loss in T1 mode. However, the XRT83VSH38 can tolerate cable loss and flat loss beyond the industry specifications. The receive sensitivity in the short haul mode is approximately 4,000 feet without experiencing bit errors, LOF, pattern synchronization, etc. Although data integrity is maintained, the RLOS function (if enabled) will report an RLOS condition according to the receiver loss of signal section in this datasheet. The test configuration for measuring the receive sensitivity is shown in **Figure 10**.

FIGURE 10. TEST CONFIGURATION FOR MEASURING RECEIVE SENSITIVITY

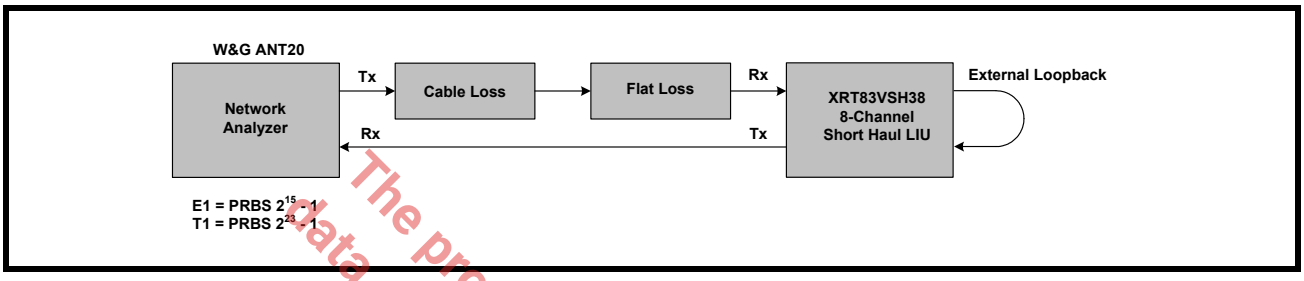

3.2.2 Interference Margin

The interference margin for the XRT83VSH38 is -15db. The test configuration for measuring the interference margin is shown in **Figure 11**.

FIGURE 11. TEST CONFIGURATION FOR MEASURING INTERFERENCE MARGIN

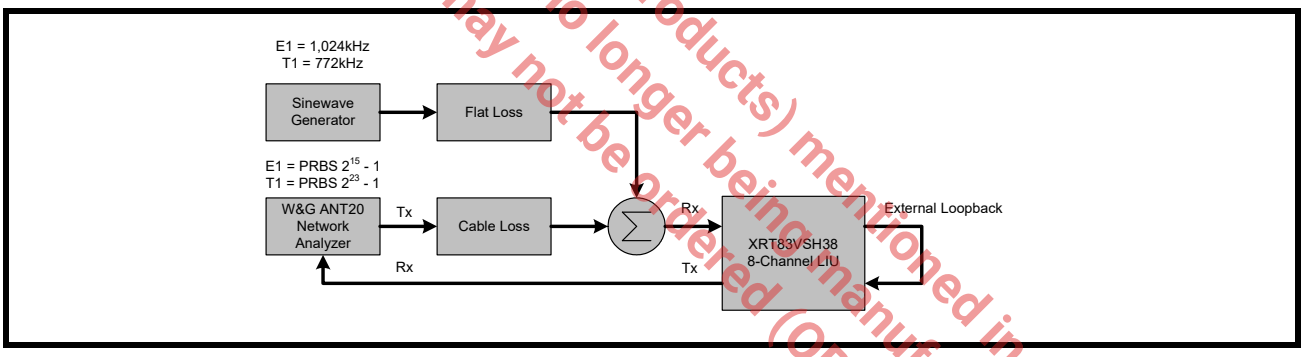

3.2.3 General Alarm Detection and Interrupt Generation

The receive path detects RLOS, AIS, QRPD and FLS. These alarms can be individually masked to prevent the alarm from triggering an interrupt. To enable interrupt generation, the Global Interrupt Enable (GIE) bit must be set "High" in the appropriate global register. Any time a change in status occurs (it the alarms are enabled), the interrupt pin will pull "Low" to indicate an alarm has occurred. Once the status registers have been read, the INT pin will return "High". The status registers are Reset Upon Read (RUR). The interrupts are categorized in a hierarchical process block. **Figure 12** is a simplified block diagram of the interrupt generation process.

FIGURE 12. INTERRUPT GENERATION PROCESS

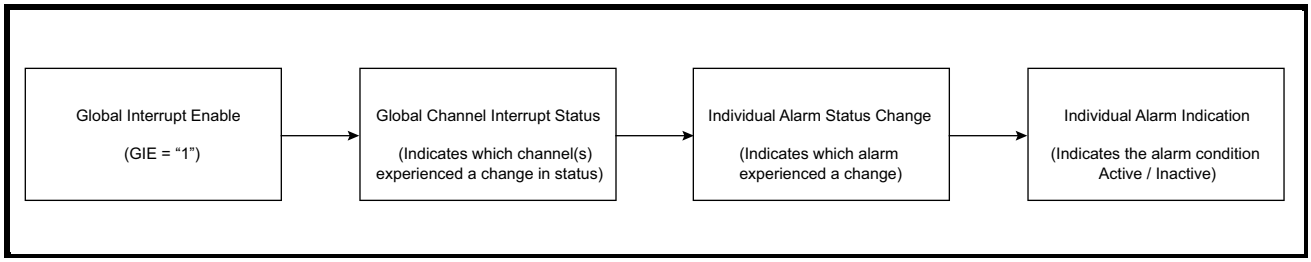

NOTE: *The interrupt pin is an open-drain output that requires a 10kΩ external pull-up resistor.*

The product (or products) mentioned in this data sheet are no longer being manufactured and may not be ordered (OBS)

3.2.3.1 RLOS (Receiver Loss of Signal)

The XRT83VSH38 supports both G.775 or ETSI-300-233 RLOS detection scheme.

In G.775 mode, RLOS is declared when the received signal is less than 375mV for 32 consecutive pulse periods (typical). The device clears RLOS when the receive signal achieves 12.5% ones density with no more than 15 consecutive zeros in a 32 bit sliding window and the signal level exceeds 425mV (typical).

In ETSI-300-233 mode the device declares RLOS when the input level drops below 375mV (typical) for more than 2048 pulse periods (1msec).

The device exits RLOS when the input signal exceeds 425mV (typical) and has transitions for more than 32 pulse periods with 12.5% ones density with no more than 15 consecutive zero's in a 32 bit sliding window. ETSI-300-233 RLOS detection method is only available in Host mode.

In T1 mode RLOS is declared when the received signal is less than 320mV for 175 consecutive pulse period (typical). The device clears RLOS when the receive signal achieves 12.5% ones density with no more than 100 consecutive zeros in a 128 bit sliding window and the signal level exceeds 425mV (typical).

3.2.3.2 EXLOS (Extended Loss of Signal)

By enabling the extended loss of signal by programming the appropriate channel register, the digital RLOS is extended to count 4,096 consecutive zeros before declaring RLOS in T1 and E1 mode. By default, EXLOS is disabled and RLOS operates in normal mode.

3.2.3.3 AIS (Alarm Indication Signal)

The XRT83VSH38 adheres to the ITU-T G.775 specification for an all ones pattern. The alarm indication signal is set to "1" if an all ones pattern (at least 99.9% ones density) is present for T, where T is 3ms to 75ms in T1 mode. AIS will clear when the ones density is not met within the same time period T. In E1 mode, the AIS is set to "1" if the incoming signal has 2 or less zeros in a 512-bit window. AIS will clear when the incoming signal has 3 or more zeros in the 512-bit window.

3.2.3.4 FLSD (FIFO Limit Status Detection)

The purpose of the FIFO limit status is to indicate when the Read and Write FIFO pointers are within a pre-determined range (over-flow or under-flow indication). The FLSD is set to "1" if the FIFO Read and Write Pointers are within ±3-Bits.

3.2.3.5 LCV (Line Code Violation)

The LIU contains 8 independent, 16-bit LCV counters. When the counters reach full-scale, they remain saturated at FFFFh until they are reset globally or on a per channel basis. For performance monitoring, the counters can be updated globally or on a per channel basis to place the contents of the counters into holding registers. The LIU uses an indirect address bus to access a counter for a given channel. Once the contents of the counters have been placed in holding registers, they can be individually read out 8-bits at a time according to the BYTEsel bit in the appropriate global register. By default, the LSB is placed in the holding register until the BYTEsel is pulled "High" where upon the MSB will be placed in the holding register for read back. Once both bytes have been read, the next channel may be selected for read back.

By default, the LCV_OFD will be set to a "1" if the receiver is currently detecting line code violations or excessive zeros for HDB3 (E1 mode) or B8ZS (T1 mode). In AMI mode, the LCV_OFD will be set to a "1" if the receiver is currently detecting bipolar violations or excessive zeros. However, if the LIU is configured to monitor the 16-bit LCV counter through software, the LCV_OFD will be set to a "1" if the counter saturates.

3.3 Receive Jitter Attenuator

The receive path has a dedicated jitter attenuator that reduces phase and frequency jitter in the recovered clock. The jitter attenuator uses a data FIFO (First In First Out) with a programmable depth of 32-bit or 64-bit. If the LIU is used for line synchronization (loop timing systems), the JA should be enabled. When the Read and Write pointers of the FIFO are within 2-Bits of over-flowing or under-flowing, the bandwidth of the jitter attenuator is widened to track the short term input jitter, thereby avoiding data corruption. When this condition occurs, the jitter attenuator will not attenuate input jitter until the Read/Write pointer's position is outside the 2-

The product (or products) mentioned in this data sheet are no longer being manufactured and may not be ordered (OBS)

Bit window. In T1 mode, the bandwidth of the JA is always set to 3Hz. In E1 mode, the bandwidth is programmable to either 10Hz or 1.5Hz (1.5Hz automatically selects the 64-Bit FIFO depth). The JA has a clock delay equal to ½ of the FIFO bit depth.

NOTE: *If the LIU is used in a multiplexer/mapper application where stuffing bits are typically removed, the transmit path has a dedicated jitter attenuator to smooth out the gapped clock. See the Transmit Section of this datasheet.*

3.4 HDB3/B8ZS Decoder

In single rail mode, RPOS can decode AMI or HDB3/B8ZS signals. For E1 mode, HDB3 is defined as any block of 4 successive zeros replaced with 000V or B00V, so that two successive V pulses are of opposite polarity to prevent a DC component. In T1 mode, 8 successive zeros are replaced with OOOVBOVB. If the HDB3/B8ZS decoder is selected, the receive path removes the V and B pulses so that the original data is output to RPOS.

3.5 RPOS/RNEG/RCLK

The digital output data can be programmed to either single rail or dual rail formats. **Figure 13** is a timing diagram of a repeating "0011" pattern in single-rail mode. **Figure 14** is a timing diagram of the same fixed pattern in dual rail mode.

The product (or products) mentioned in this data sheet are no longer being manufactured and may not be ordered (OBS)

FIGURE 13. SINGLE RAIL MODE WITH A FIXED REPEATING "0011" PATTERN

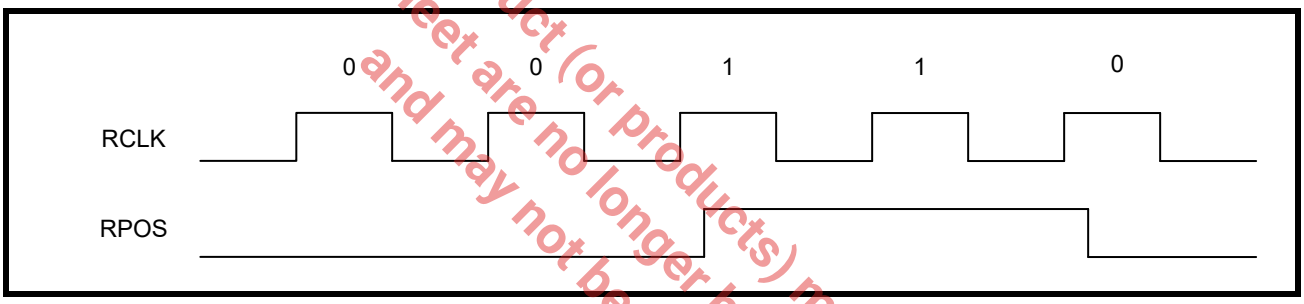

FIGURE 14. DUAL RAIL MODE WITH A FIXED REPEATING "0011" PATTERN

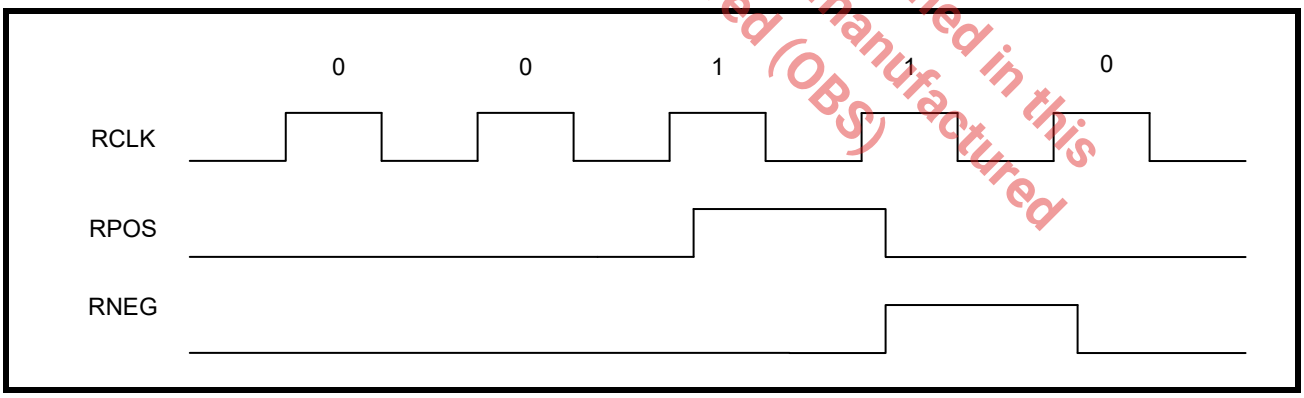

3.6 RxMUTE (Receiver LOS with Data Muting)

The receive muting function can be selected by setting RxMUTE to "1" in the appropriate global register. If selected, any channel that experiences an RLOS condition will automatically pull RPOS and RNEG "Low" to prevent data chattering. If RLOS does not occur, the RxMUTE will remain inactive until an RLOS on a given channel occurs. The default setting for RxMUTE is "0" which is disabled. A simplified block diagram of the RxMUTE function is shown in **Figure 15**.

FIGURE 15. SIMPLIFIED BLOCK DIAGRAM OF THE RXMUTE FUNCTION

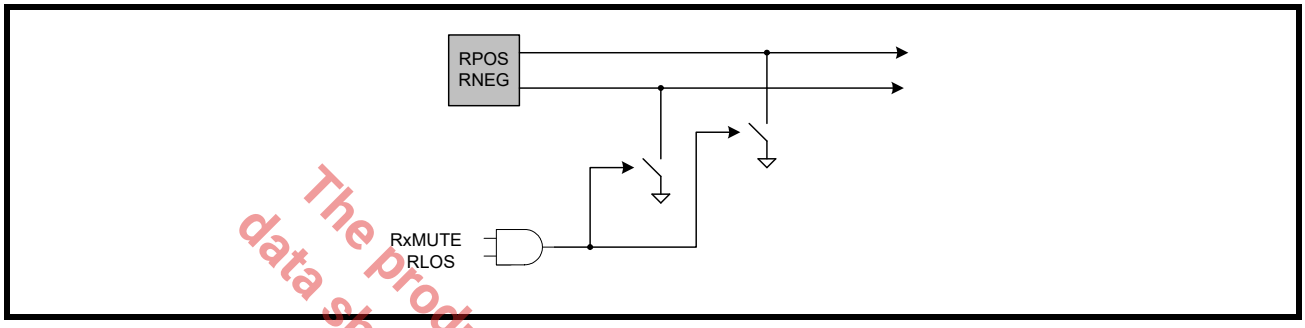

The product (or products) mentioned in this data sheet are no longer being manufactured and may not be ordered (OBS)

4.0 TRANSMIT PATH LINE INTERFACE

The transmit path of the XRT83VSH38 LIU consists of 8 independent T1/E1/J1 transmitters. The following section describes the complete transmit path from TCLK/TPOS/TNEG inputs to TTIP/TRING outputs. A simplified block diagram of the transmit path is shown in **Figure 16**.

FIGURE 16. SIMPLIFIED BLOCK DIAGRAM OF THE TRANSMIT PATH

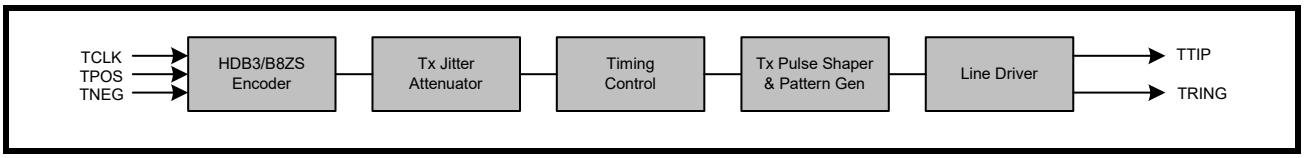

4.1 TCLK/TPOS/TNEG Digital Inputs

In dual rail mode, TPOS and TNEG are the digital inputs for the transmit path. In single rail mode, TNEG has no function and can be left unconnected. The XRT83VSH38 can be programmed to sample the inputs on either edge of TCLK. By default, data is sampled on the falling edge of TCLK. To sample data on the rising edge of TCLK, set TCLKE to "1" in the appropriate global register. **Figure 17** is a timing diagram of the transmit input data sampled on the falling edge of TCLK. **Figure 18** is a timing diagram of the transmit input data sampled on the rising edge of TCLK. The timing specifications are shown in **Table 6**.

The product(s) mentioned in this data sheet are no longer being manufactured and may not be ordered (OBS)

FIGURE 17. TRANSMIT DATA SAMPLED ON FALLING EDGE OF TCLK

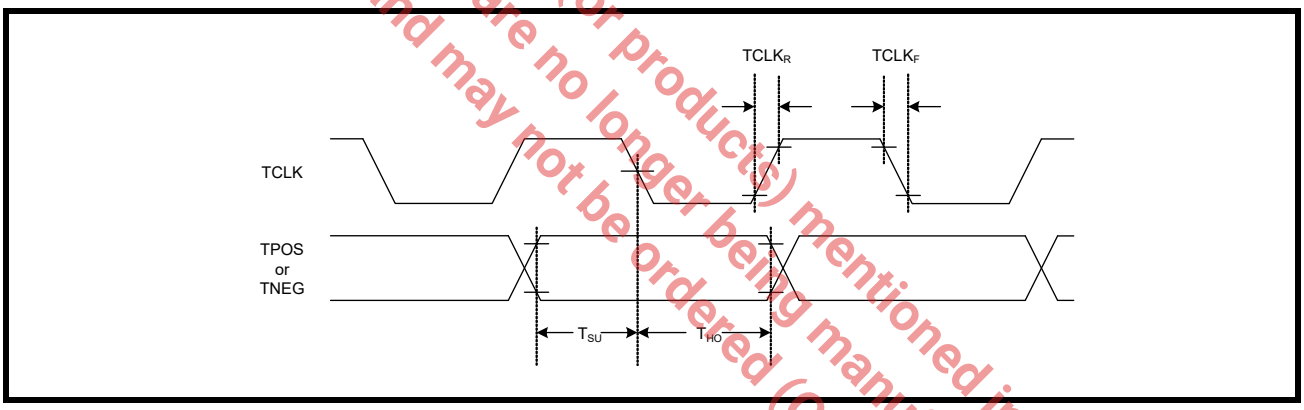

FIGURE 18. TRANSMIT DATA SAMPLED ON RISING EDGE OF TCLK

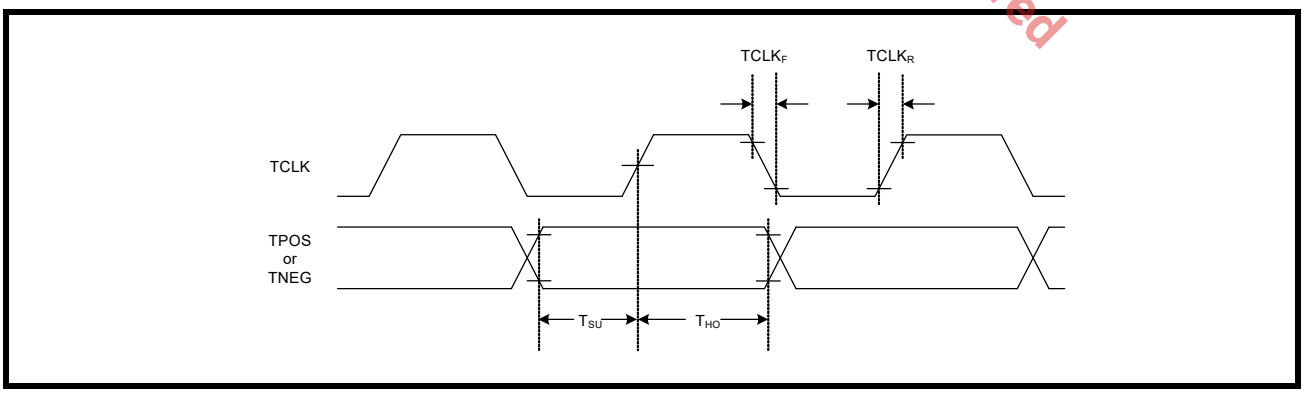

TABLE 6: TIMING SPECIFICATIONS FOR TCLK/TPOS/TNEG

PARAMETER	SYMBOL	MIN	TYP	MAX	UNITS
TCLK Duty Cycle	T_{CDU}	30	50	70	%
Transmit Data Setup Time	T_{SU}	50	-	-	ns
Transmit Data Hold Time	T_{HO}	30	-	-	ns
TCLK Rise Time (10% to 90%)	$TCLK_R$	-	-	40	ns
TCLK Fall Time (90% to 10%)	$TCLK_F$	-	-	40	ns

NOTE: *VDD=3.3V ±5%, T_A=25°C, Unless Otherwise Specified*

4.2 HDB3/B8ZS Encoder

In single rail mode, the LIU can encode the TPOS input signal to AMI or HDB3/B8ZS data. In E1 mode and HDB3 encoding selected, any sequence with four or more consecutive zeros in the input will be replaced with 000V or B00V, where "B" indicates a pulse conforming to the bipolar rule and "V" representing a pulse violating the rule. An example of HDB3 encoding is shown in **Table 7**. In T1 mode and B8ZS encoding selected, an input data sequence with eight or more consecutive zeros will be replaced using the B8ZS encoding rule. An example with Bipolar with 8 Zero Substitution is shown in **Table 8**.

The product(s) mentioned in this data sheet are no longer being manufactured and may not be ordered (OBS)

TABLE 7: EXAMPLES OF HDB3 ENCODING

	NUMBER OF PULSES BEFORE NEXT 4 ZEROS	
Input		0000
HDB3 (Case 1)	Odd	000V
HDB3 (Case 2)	Even	B00V

TABLE 8: EXAMPLES OF B8ZS ENCODING

	PRECEDING PULSE	NEXT 8 BITS
Case 1		
Input	+	00000000
B8ZS		000VB0VB
AMI Output	+	000+-0-+
Case 2		
Input	-	00000000
B8ZS		000VB0VB
AMI Output	-	000-+0+-

4.3 Transmit Jitter Attenuator

The XRT83VSH38 LIU is ideal for multiplexer or mapper applications where the network data crosses multiple timing domains. As the higher data rates are de-multiplexed down to T1 or E1 data, stuffing bits are typically removed which can leave gaps in the incoming data stream. The transmit path has a dedicated jitter attenuator with a 32-Bit or 64-Bit FIFO that is used to smooth the gapped clock into a steady T1 or E1 output. The maximum gap width of the 8-channel LIU is shown in Table 9.

TABLE 9: MAXIMUM GAP WIDTH FOR MULTIPLEXER/MAPPER APPLICATIONS

FIFO DEPTH	MAXIMUM GAP WIDTH
32-Bit	9 UI
64-Bit	9 UI

NOTE: *If the LIU is used in a loop timing system, the receive path has a dedicated jitter attenuator. See the Receive Section of this datasheet.*

The product (or products) mentioned in this data sheet are no longer being manufactured and may not be ordered (OBS)

4.4 TAOS (Transmit All Ones)

The XRT83VSH38 has the ability to transmit all ones on a per channel basis by programming the appropriate channel register. This function takes priority over the digital data present on the TPOS/TNEG inputs. For example: If a fixed "0011" pattern is present on TPOS in single rail mode and TAOS is enabled, the transmitter will output all ones. In addition, if digital or dual loopback is selected, the data on the RPOS output will be equal to the data on the TPOS input. Figure 19 is a diagram showing the all ones signal at TTIP and TRING.

FIGURE 19. TAOS (TRANSMIT ALL ONES)

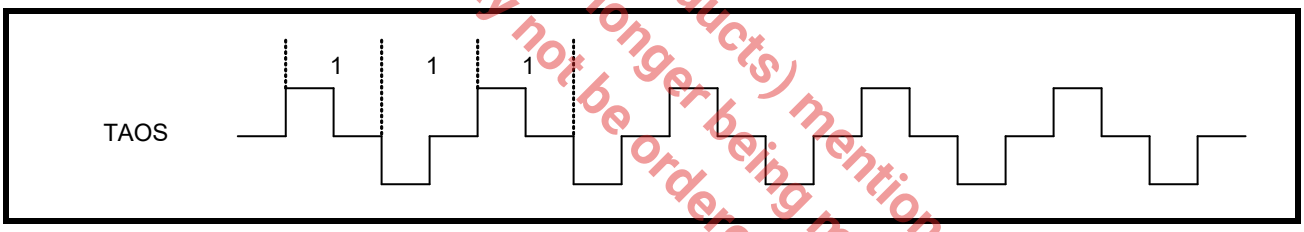

4.5 Transmit Diagnostic Features

In addition to TAOS, the XRT83VSH38 offers diagnostic features for analyzing network integrity such as ATAOS and QRSS on a per channel basis by programming the appropriate registers. These diagnostic features take priority over the digital data present on TPOS/TNEG inputs. The transmitters will send the diagnostic code to the line and will be maintained in the digital loopback if selected. When the LIU is responsible for sending diagnostic patterns, the LIU is automatically placed in the single rail mode.

4.5.1 ATAOS (Automatic Transmit All Ones)

If ATAOS is selected by programming the appropriate global register, an AMI all ones signal will be transmitted for each channel that experiences an RLOS condition. If RLOS does not occur, the ATAOS will remain inactive until an RLOS on a given channel occurs. A simplified block diagram of the ATAOS function is shown in Figure 20.

FIGURE 20. SIMPLIFIED BLOCK DIAGRAM OF THE ATAOS FUNCTION

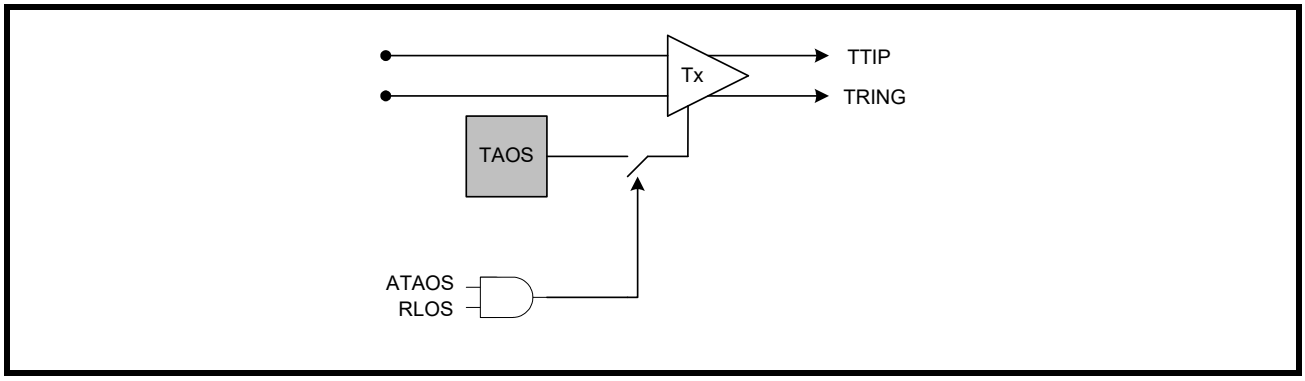

4.5.2 QRSS/PRBS Generation

The XRT83VSH38 can transmit a QRSS/PRBS random sequence to a remote location from TTIP/TRING. The polynomial is shown in Table 10.

TABLE 10: RANDOM BIT SEQUENCE POLYNOMIALS

RANDOM PATTERN	T1	E1
QRSS	$2^{20} - 1$	$2^{20} - 1$
PRBS	$2^{15} - 1$	$2^{15} - 1$

4.5.3 T1 Short Haul Line Build Out (LBO)

The short haul transmitter output pulses are generated using a 7-Bit internal DAC (6-Bit plus the MSB sign bit). The line build out can be set to interface to five different ranges of cable attenuation by programming the appropriate channel register. The pulse shape is divided into eight discrete time segments which are set to fixed values to comply with the pulse template. To program the eight segments individually to optimize a special line build out, see the arbitrary pulse section of this datasheet. The short haul LBO settings are shown in Table 11.

TABLE 11: SHORT HAUL LINE BUILD OUT

LBO SETTING EQC[4:0]	RANGE OF CABLE ATTENUATION
08h (01000)	0 - 133 Feet
09h (01001)	133 - 266 Feet
0Ah (01010)	266 - 399 Feet
0Bh (01011)	399 - 533 Feet
0Ch (01100)	533 - 655 Feet

4.5.4 Arbitrary Pulse Generator For T1 and E1

The arbitrary pulse generator divides the pulse into eight individual segments. Each segment is set by a 7-Bit binary word by programming the appropriate channel register. This allows the system designer to set the overshoot, amplitude, and undershoot for a unique line build out. The MSB (bit 7) is a sign-bit. If the sign-bit is set to "0", the segment will move in a positive direction relative to a flat line (zero) condition. If this sign-bit is set to "1", the segment will move in a negative direction relative to a flat line condition. The resolution of the DAC is typically 45mV per LSB. Thus, writing 7-bit = 1111111 will clamp the output at either voltage rail corresponding to a maximum amplitude. A pulse with numbered segments is shown in Figure 21.

The product (or products) mentioned in this data sheet are no longer in manufacture and may not be ordered (OBS)

FIGURE 21. ARBITRARY PULSE SEGMENT ASSIGNMENT

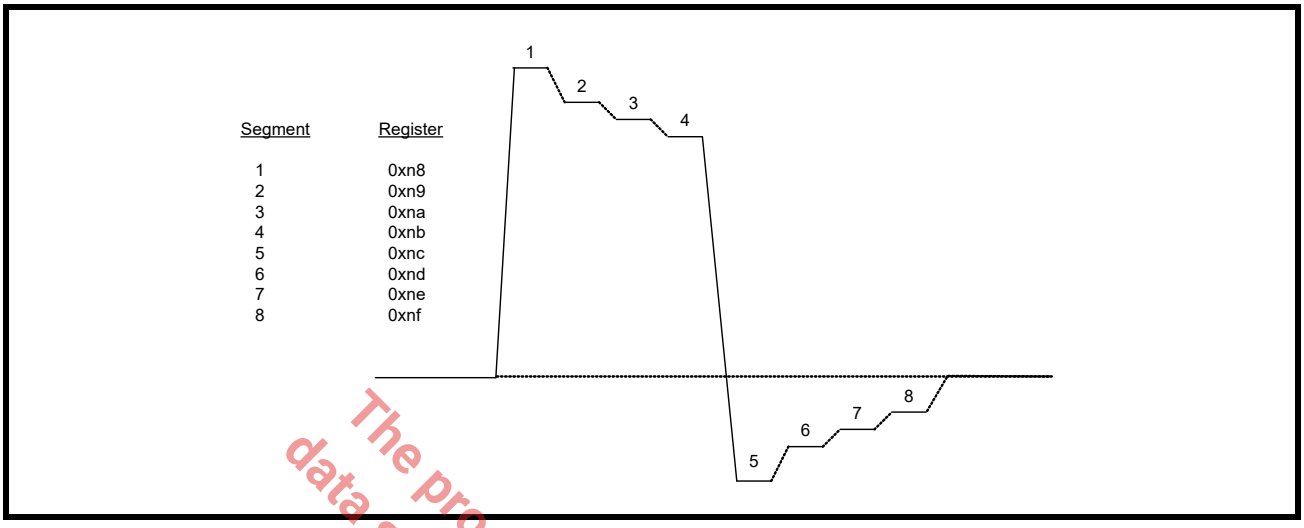

NOTE: *By default, the arbitrary segments are programmed to 0x00h. The transmitter outputs will result in an all zero pattern to the line interface.*

4.6 DMO (Digital Monitor Output)

The driver monitor circuit is used to detect transmit driver failures by monitoring the activities at TTIP/TRING outputs. Driver failure may be caused by a short circuit in the primary transformer or system problems at the transmit inputs. If the transmitter of a channel has no output for more than 128 clock cycles, DMO goes "High" until a valid transmit pulse is detected. If the DMO interrupt is enabled, the change in status of DMO will cause the interrupt pin to go "Low". Once the status register is read, the interrupt pin will return "High" and the status register will be reset (RUR).

4.7 Line Termination (TTIP/TRING)

The output stage of the transmit path generates standard return-to-zero (RZ) signals to the line interface for T1/E1/J1 twisted pair or E1 coaxial cable. The physical interface is optimized by placing the terminating impedance inside the LIU. This allows one bill of materials for all modes of operation reducing the number of external components necessary in system design. The transmitter outputs only require one DC blocking capacitor of 0.68μF. For redundancy applications (or simply to tri-state the transmitters), set TxTSEL to a "1" in the appropriate channel register. A typical transmit interface is shown in **Figure 22**.

FIGURE 22. TYPICAL CONNECTION DIAGRAM USING INTERNAL TERMINATION

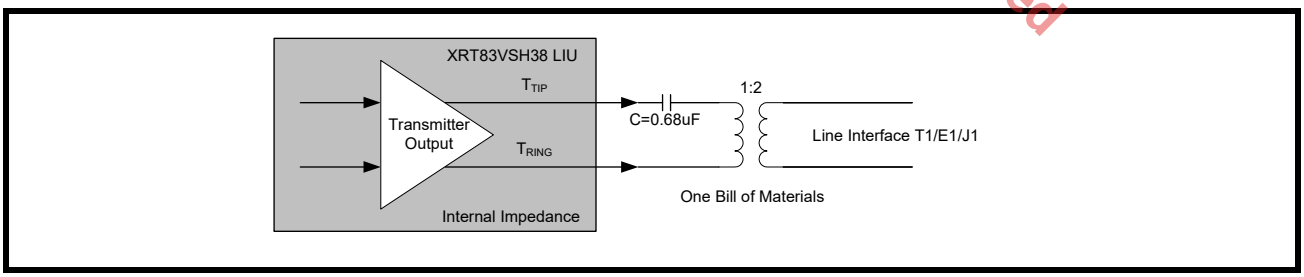

The product (or products) mentioned in this data sheet are no longer being manufactured and may not be ordered (OBS)

5.0 T1/E1 APPLICATIONS

This applications section describes common T1/E1 system considerations along with references to application notes available for reference where applicable.

5.1 Loopback Diagnostics

The XRT83VSH38 supports several loopback modes for diagnostic testing. The following section describes the local analog loopback, remote loopback, digital loopback, and dual loopback modes.

5.1.1 Local Analog Loopback

With local analog loopback activated, the transmit output data at TTIP/TRING is internally looped back to the analog inputs at RTIP/RRING. External inputs at RTIP/RRING are ignored while valid transmit output data continues to be sent to the line. A simplified block diagram of local analog loopback is shown in **Figure 23**.

FIGURE 23. SIMPLIFIED BLOCK DIAGRAM OF LOCAL ANALOG LOOPBACK

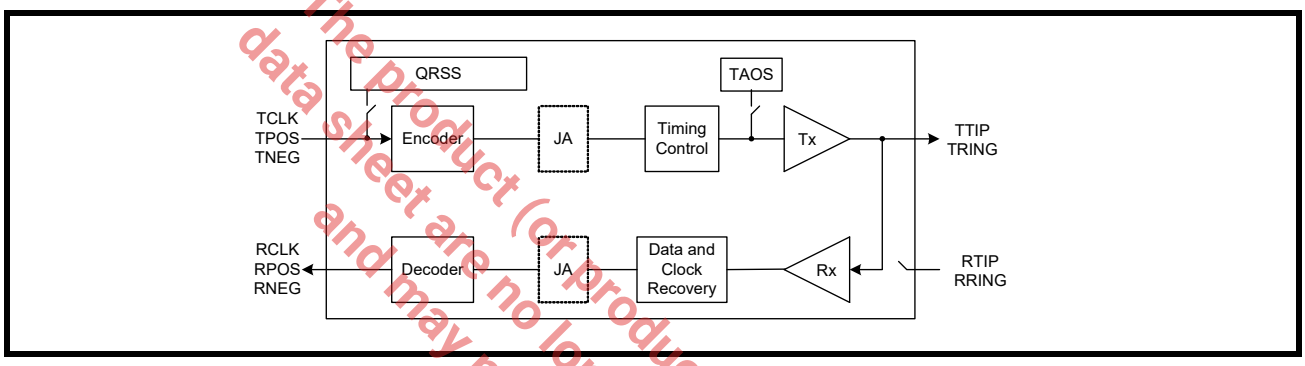

NOTE: *The transmit diagnostic features such as TAOS and QRSS take priority over the transmit input data at TCLK/TPOS/TNEG.*

5.1.2 Remote Loopback

With remote loopback activated, the receive input data at RTIP/RRING is internally looped back to the transmit output data at TTIP/TRING. The remote loopback includes the Receive JA (if enabled). The transmit input data at TCLK/TPOS/TNEG are ignored while valid receive output data continues to be sent to the system. A simplified block diagram of remote loopback is shown in **Figure 24**.

FIGURE 24. SIMPLIFIED BLOCK DIAGRAM OF REMOTE LOOPBACK

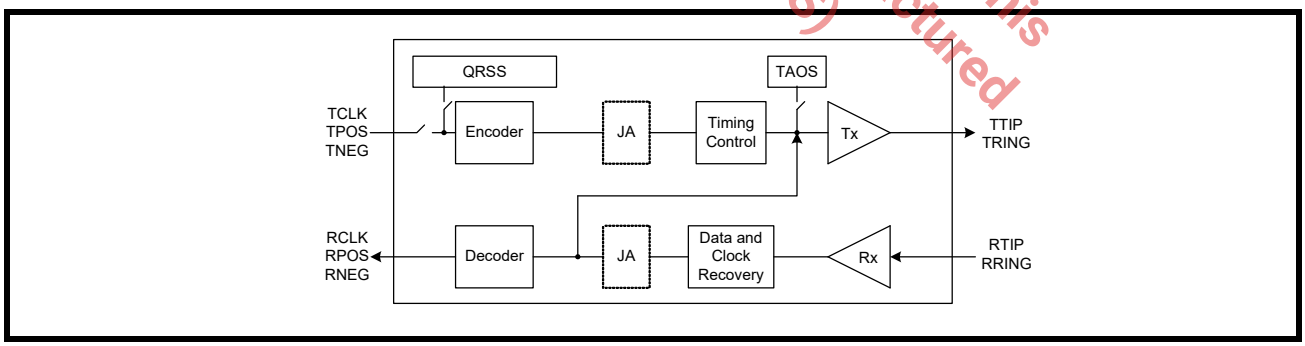

The product (or products) mentioned in this data sheet are no longer being manufactured and may not be ordered (OBS)

5.1.3 Digital Loopback

With digital loopback activated, the transmit input data at TCLK/TPOS/TNEG is looped back to the receive output data at RCLK/RPOS/RNEG. The digital loopback mode includes the Transmit JA (if enabled). The receive input data at RTIP/RRING is ignored while valid transmit output data continues to be sent to the line. A simplified block diagram of digital loopback is shown in **Figure 25**.

FIGURE 25. SIMPLIFIED BLOCK DIAGRAM OF DIGITAL LOOPBACK

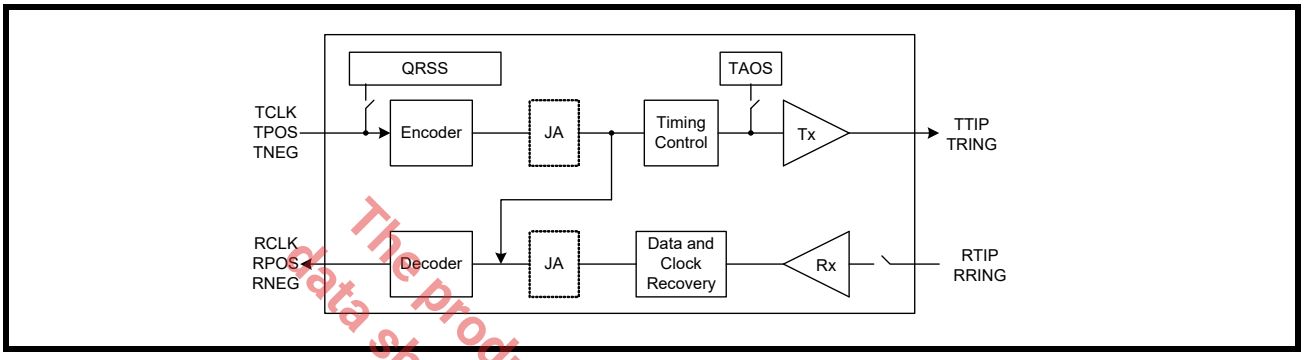

5.1.4 Dual Loopback

With dual loopback activated, the remote loopback is combined with the digital loopback. A simplified block diagram of dual loopback is shown in **Figure 26**.

FIGURE 26. SIMPLIFIED BLOCK DIAGRAM OF DUAL LOOPBACK

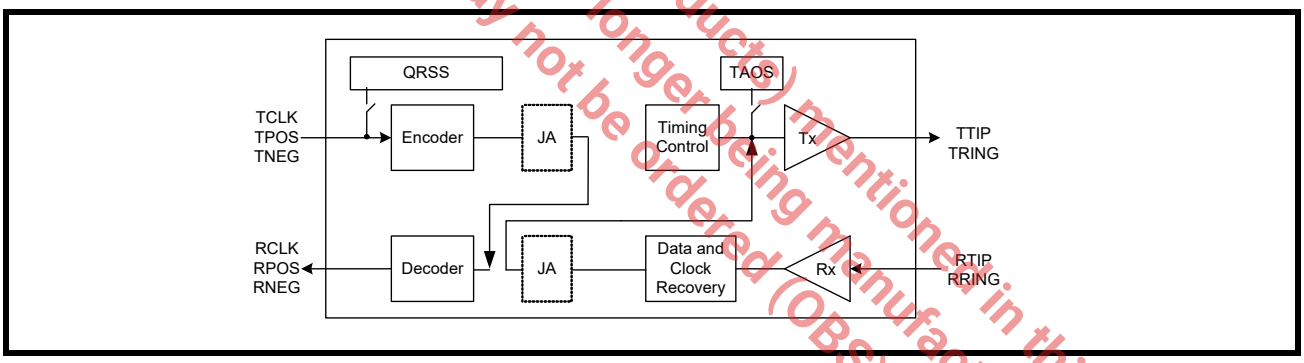

The product(or products) mentioned in this data sheet are no longer being manufactured and may not be ordered (OBS)

5.2 *Line Card Redundancy*

Telecommunication system design requires signal integrity and reliability. When a T1/E1 primary line card has a failure, it must be swapped with a backup line card while maintaining connectivity to a backplane without losing data. System designers can achieve this by implementing common redundancy schemes with the XRT83VSH38 LIU. EXAR offers features that are tailored to redundancy applications while reducing the number of components and providing system designers with solid reference designs.

RLOS and DMO

If an RLOS or DMO condition occurs, the XRT83VSH38 reports the alarm to the individual status registers on a per channel basis. However, for redundancy applications, an RLOS or DMO alarm can be used to initiate an automatic switch to the back up card. For this application, two global pins RLOS and DMO are used to indicate that one of the 8-channels has an RLOS or DMO condition.

Typical Redundancy Schemes

- 1:1 One backup card for every primary card (Facility Protection)
- 1+1 One backup card for every primary card (Line Protection)
- ·N+1 One backup card for N primary cards

5.2.1 1:1 and 1+1 Redundancy Without Relays

The 1:1 facility protection and 1+1 line protection have one backup card for every primary card. When using 1:1 or 1+1 redundancy, the backup card has its transmitters tri-stated and its receivers in high impedance. This eliminates the need for external relays and provides one bill of materials for all interface modes of operation. For 1+1 line protection, the receiver inputs on the backup card have the ability to monitor the line for bit errors while in high impedance. The transmit and receive sections of the LIU device are described separately.

5.2.2 Transmit Interface with 1:1 and 1+1 Redundancy

The transmitters on the backup card should be tri-stated. Select the appropriate impedance for the desired mode of operation, T1/E1/J1. A 0.68uF capacitor is used in series with TTIP for blocking DC bias. See **Figure 27**. for a simplified block diagram of the transmit section for a 1:1 and 1+1 redundancy.

FIGURE 27. SIMPLIFIED BLOCK DIAGRAM OF THE TRANSMIT INTERFACE FOR 1:1 AND 1+1 REDUNDANCY

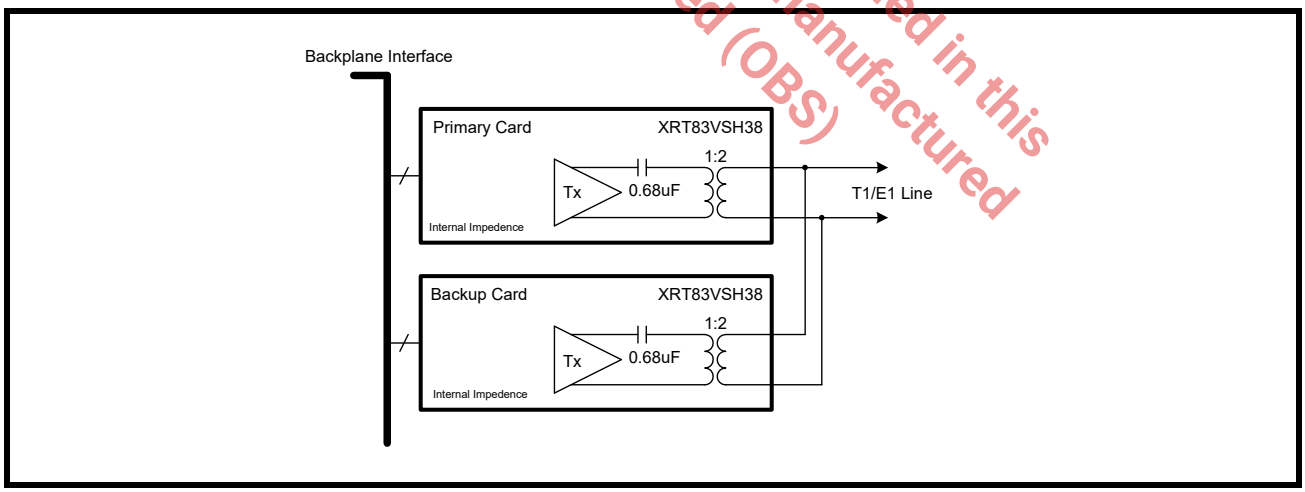

The product (s) mentioned in this data sheet are no longer being manufactured and may not be ordered (OBS)

5.2.3 Receive Interface with 1:1 and 1+1 Redundancy

The receivers on the backup card should be programmed for "High" impedance. Since there is no external resistor in the circuit, the receivers on the backup card will not load down the line interface. This key design feature eliminates the need for relays and provides one bill of materials for all interface modes of operation. Select the impedance for the desired mode of operation, T1/E1/J1. To swap the primary card, set the backup card to internal impedance, then the primary card to "High" impedance. See **Figure 28**. for a simplified block diagram of the receive section for a 1:1 redundancy scheme.

FIGURE 28. SIMPLIFIED BLOCK DIAGRAM OF THE RECEIVE INTERFACE FOR 1:1 AND 1+1 REDUNDANCY

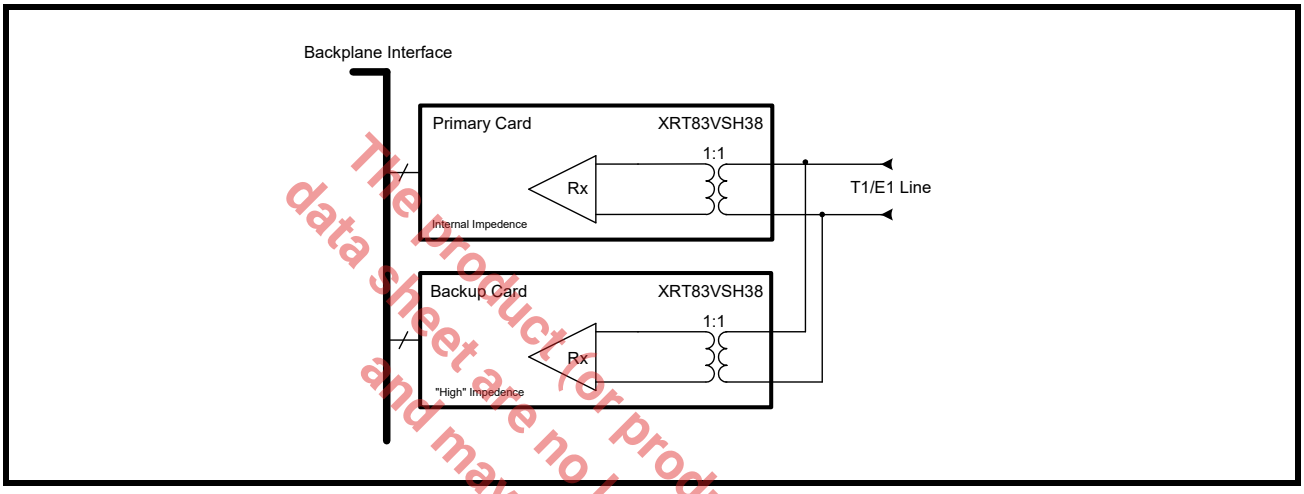

The product(s) mentioned in this data sheet are no longer being manufactured and may not be ordered (OBS)

5.2.4 N+1 Redundancy Using External Relays

N+1 redundancy has one backup card for N primary cards. Due to impedance mismatch and signal contention, external relays are necessary when using this redundancy scheme. The relays create complete isolation between the primary cards and the backup card. This allows all transmitters and receivers on the primary cards to be configured in internal impedance, providing one bill of materials for all interface modes of operation. The transmit and receive sections of the LIU device are described separately.

5.2.5 Transmit Interface with N+1 Redundancy

For N+1 redundancy, the transmitters on all cards should be programmed for internal impedance. The transmitters on the backup card do not have to be tri-stated. To swap the primary card, close the desired relays, and tri-state the transmitters on the failed primary card. A 0.68uF capacitor is used in series with TTIP for blocking DC bias. See **Figure 29** for a simplified block diagram of the transmit section for an N+1 redundancy scheme.

FIGURE 29. SIMPLIFIED BLOCK DIAGRAM OF THE TRANSMIT INTERFACE FOR N+1 REDUNDANCY

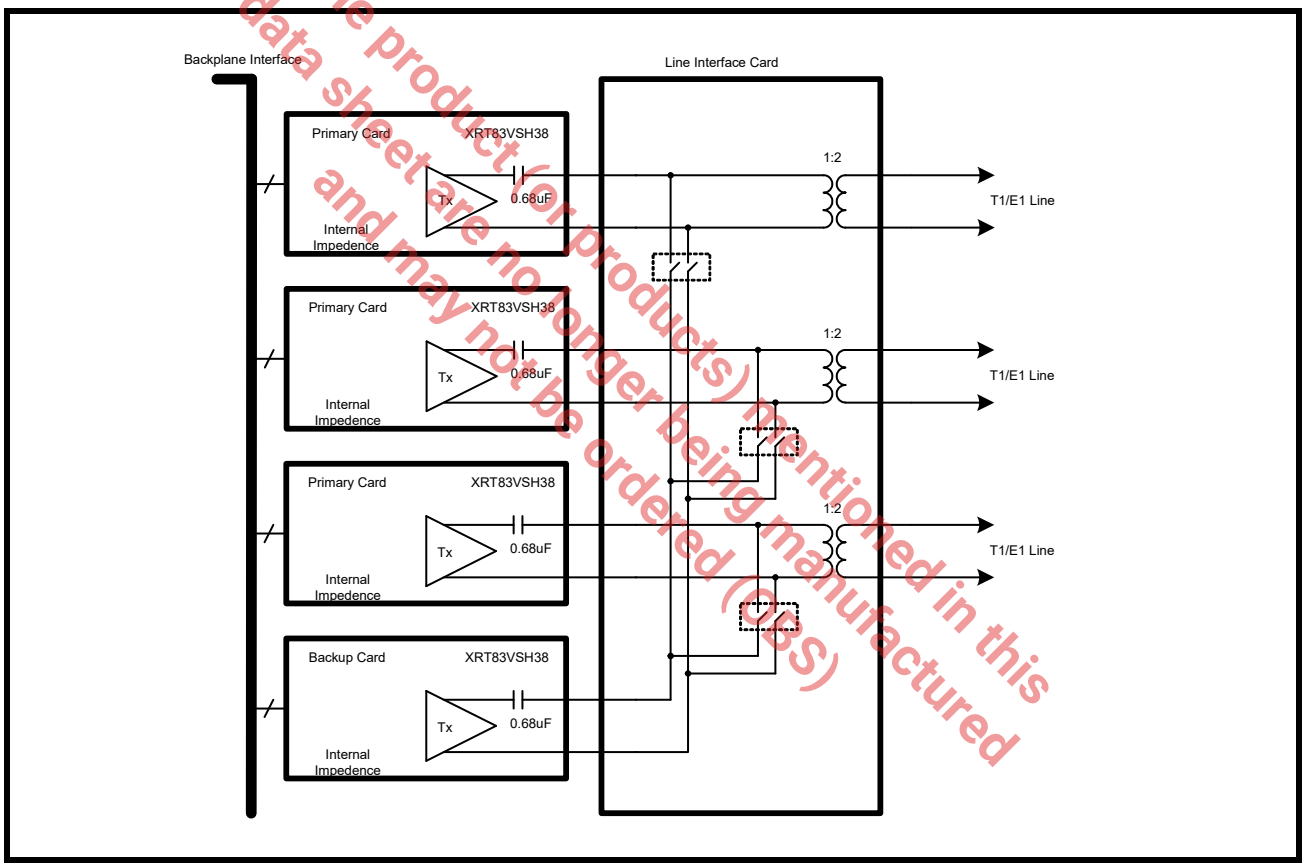

The product(s) mentioned in this data sheet are no longer being manufactured and may not be ordered (EOS)

5.2.6 Receive Interface with N+1 Redundancy

For N+1 redundancy, the receivers on the primary cards should be programmed for internal impedance. The receivers on the backup card should be programmed for "High" impedance mode. To swap the primary card, set the backup card to internal impedance, then the primary card to "High" impedance. See **Figure 30** for a simplified block diagram of the receive section for a N+1 redundancy scheme.

FIGURE 30. SIMPLIFIED BLOCK DIAGRAM OF THE RECEIVE INTERFACE FOR N+1 REDUNDANCY

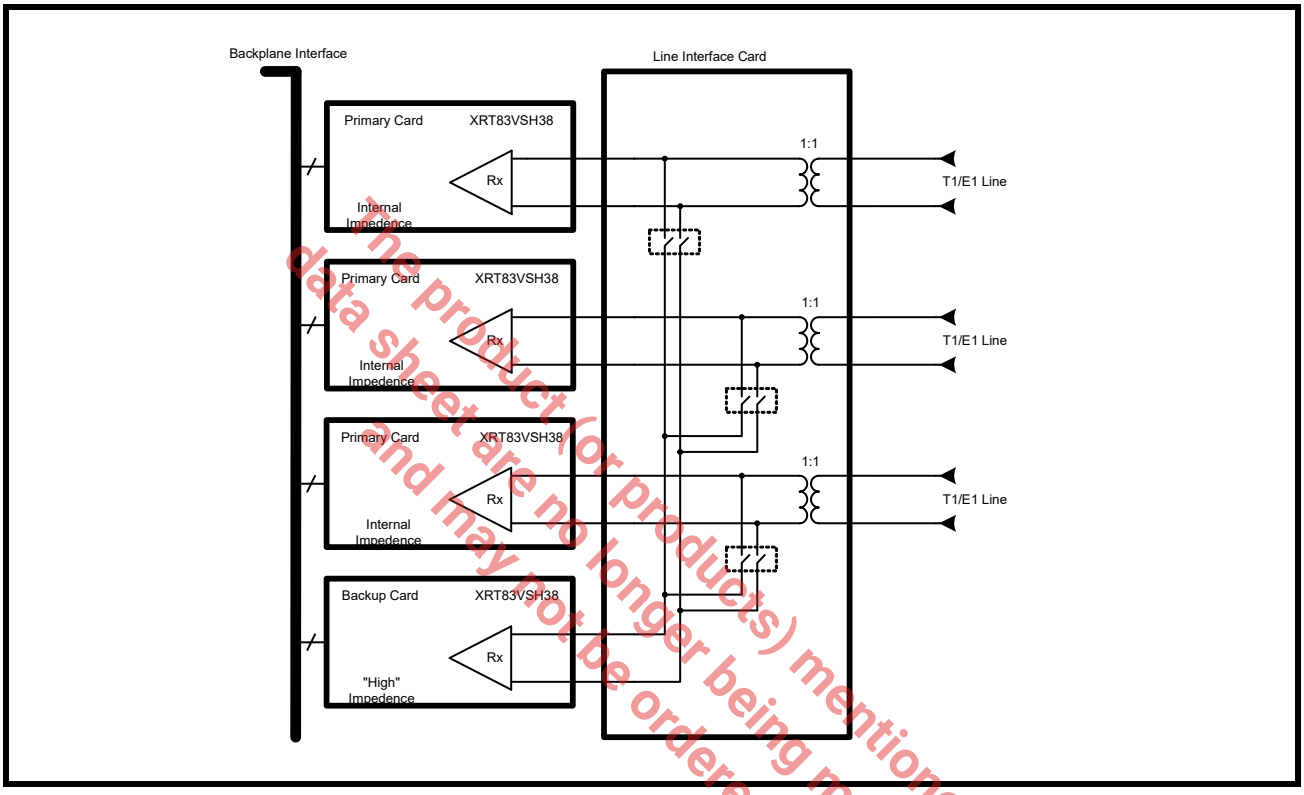

The product(or products) mentioned in this data sheet are no longer being manufactured and may not be ordered (OBS)

5.3 Power Failure Protection

For 1:1 or 1+1 line card redundancy in T1/E1 applications, power failure could cause a line card to change the characteristics of the line impedance, causing a degradation in system performance. The XRT83VSH38 was designed to ensure reliability during power failures. The LIU has patented high impedance circuits that allow the receiver inputs and the transmitter outputs to be in "High" impedance when the LIU experiences a power failure or when the LIU is powered off.

NOTE: *For power failure protection, a transformer must be used to couple to the line interface. See the TAN-56 application note for more details.*

5.4 Overvoltage and Overcurrent Protection

Physical layer devices such as LIUs that interface to telecommunications lines are exposed to overvoltage transients posed by environmental threats. An Overvoltage transient is a pulse of energy concentrated over a small period of time, usually under a few milliseconds. These pulses are random and exceed the operating conditions of CMOS transceiver ICs. Electronic equipment connecting to data lines are susceptible to many forms of overvoltage transients such as lightning, AC power faults and electrostatic discharge (ESD). There are three important standards when designing a telecommunications system to withstand overvoltage transients.

- UL1950 and FCC Part 68
- Telcordia (Bellcore) GR-1089
- ITU-T K.20, K.21 and K.41

5.5 Non-Intrusive Monitoring

In non-intrusive monitoring applications, the transmitters are shut off by setting TxON "Low". The receivers must be actively receiving data without interfering with the line impedance. The XRT83VSH38's internal termination ensures that the line termination meets T1/E1 specifications for 75Ω, 100Ω or 120Ω while monitoring the data stream. System integrity is maintained by placing the non-intrusive receiver in "High" impedance, equivalent to that of a 1+1 redundancy application. A simplified block diagram of non-intrusive monitoring is shown in **Figure 31**.

FIGURE 31. SIMPLIFIED BLOCK DIAGRAM OF A NON-INTRUSIVE MONITORING APPLICATION

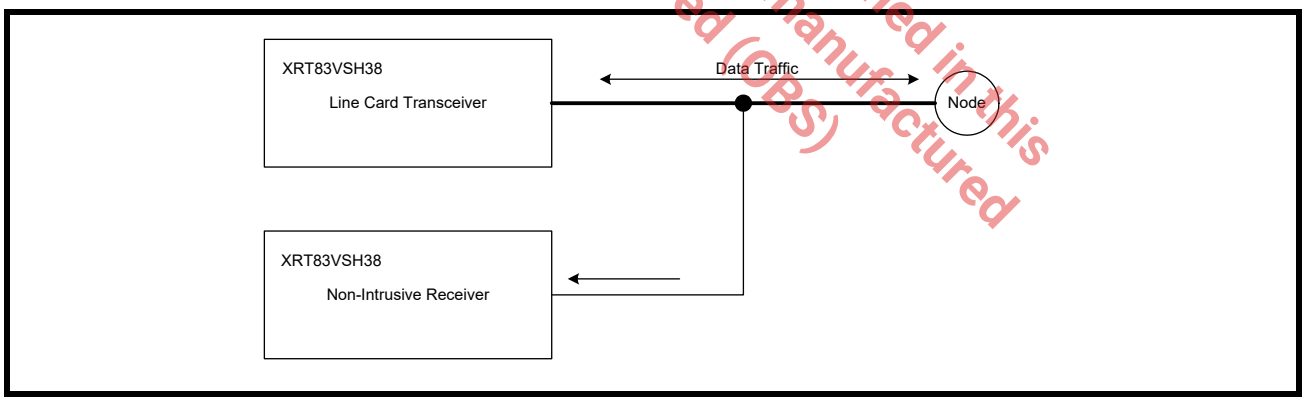

The product (or products) mentioned in this data sheet are no longer being manufactured and may not be ordered (OBS)

6.0 MICROPROCESSOR INTERFACE

The microprocessor interface can be accessed through a standard serial interface (BGA Package Only) or a standard parallel microprocessor interface. The SER_PAR pin is used to select between the two. By default, the chip is configured in the Parallel Microprocessor interace. For Serial communication, this pin must be pulled "High".

6.1 Serial Microprocessor Interface Block (BGA Package Only)

The serial microprocessor uses a standard 3-pin serial port with CS, SCLK, and SDI for programming the LIU. Optional pins such as SDO, INT, and RESET allow the ability to read back contents of the registers, monitor the LIU via an interrupt pin, and reset the LIU to its default configuration by pulling reset "Low" for more than 10µS. A simplified block diagram of the Serial Microprocessor is shown in **Figure 32**.

FIGURE 32. SIMPLIFIED BLOCK DIAGRAM OF THE SERIAL MICROPROCESSOR INTERFACE

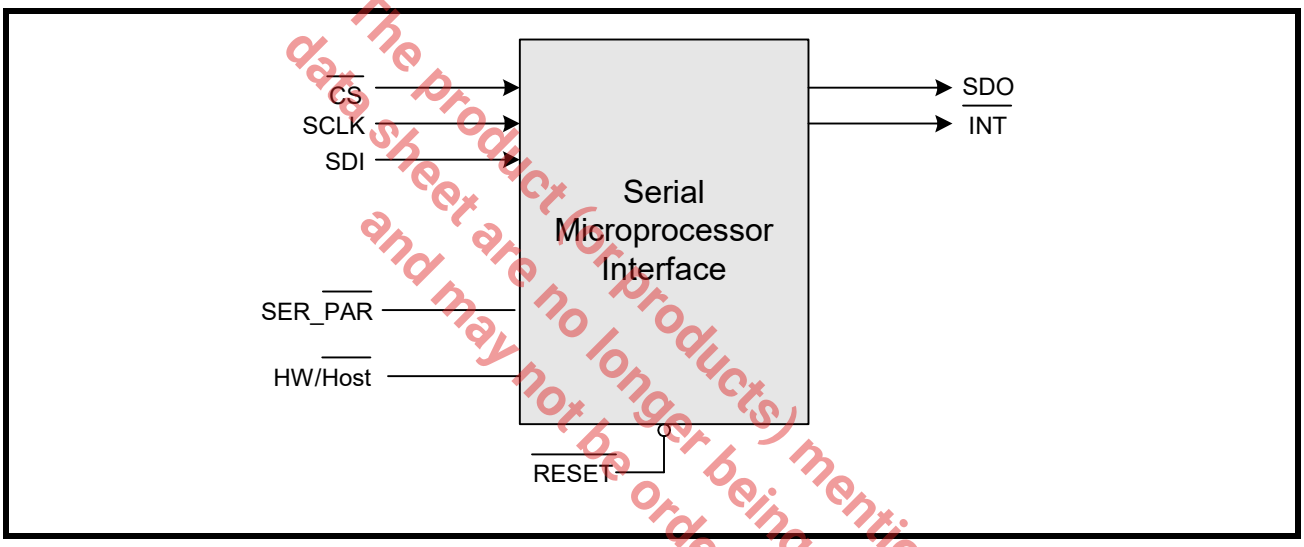

The product (or products) mentioned in this data sheet are no longer being manufactured and may not be ordered (OBS)

6.1.1 Serial Timing Information

The serial port requires 24 bits of data applied to the SDI (Serial Data Input) pin. The Serial Microprocessor samples SDI on the rising edge of SCLK (Serial Clock Input). The data is not latched into the device until all 24 bits of serial data have been sampled. A timing diagram of the Serial Microprocessor is shown in **Figure 33**.

FIGURE 33. TIMING DIAGRAM FOR THE SERIAL MICROPROCESSOR INTERFACE

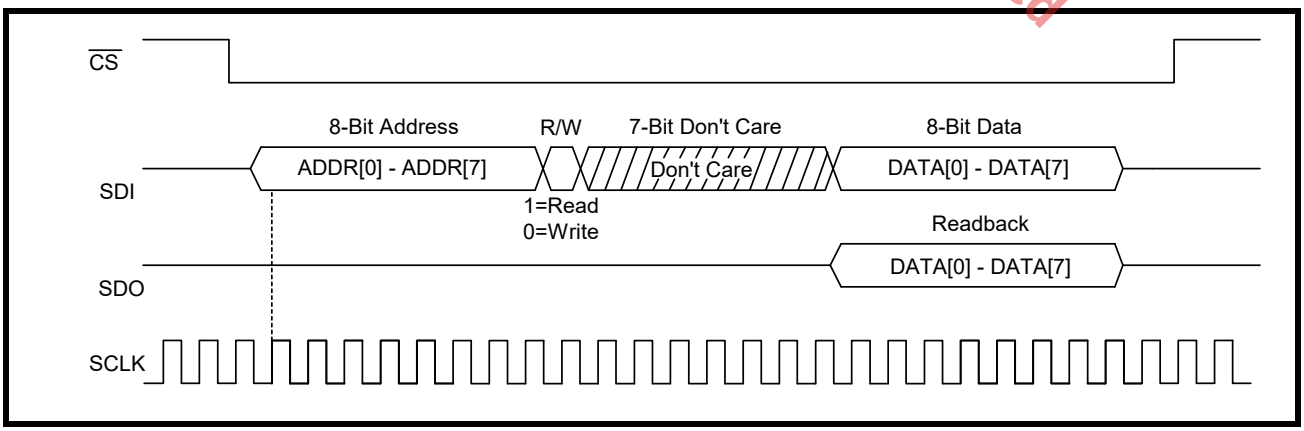

NOTE: *For applications without a free running SCLK, a minimum of 1 SCLK pulse must be applied when CS is "High", befrore pulling CS "Low".*

6.1.2 24-Bit Serial Data Input Descritption

The serial data input is sampled on the rising edge of SCLK. In readback mode, the serial data output is updated on the falling edge of SCLK. The serial data must be applied to the LIU LSB first. The 24 bits of serial data are described below.

6.1.3 ADDR[7:0] (SCLK1 - SCLK8)

The first 8 SCLK cycles are used to provide the address to which a Read or Write operation will occur. ADDR[0] (LSB) must be sent to the LIU first followed by ADDR[1] and so forth until all 8 address bits have been sampled by SCLK.

6.1.4 R/W (SCLK9)

The next serial bit applied to the LIU informs the microprocessor that a Read or Write operation is desired. If the R/W bit is set to “0”, the microprocessor is configured for a Write operation. If the R/W bit is set to “1”, the microprocessor is configured for a Read operation.

6.1.5 Dummy Bits (SCLK10 - SCLK16)

The next 7 SCLK cycles are used as dummy bits. Seven bits were chosen so that the serial interface can easily be divided into three 8-bit words to be compliant with standard serial interface devices. The state of these bits are ignored and can hold either “0” or “1” during both Read and Write operations.

6.1.6 DATA[7:0] (SCLK17 - SCLK24)

The next 8 SCLK cycles are used to provide the data to be written into the internal register chosen by the address bits. DATA[0] (LSB) must be sent to the LIU first followed by DATA[1] and so forth until all 8 data bits have been sampled by SCLK. Once 24 SCLK cycles have been completed, the LIU holds the data until $\overline{CS}$ is pulled “High” whereby, the serial microprocessor latches the data into the selected internal register.

6.1.7 8-Bit Serial Data Output Description

The serial data output is updated on the falling edge of SCLK17 - SCLK24 if R/W is set to “1”. DATA[0] (LSB) is provided on SCLK17 to the SDO pin first followed by DATA[1] and so forth until all 8 data bits have been updated. The SDO pin allows the user to read the contents stored in individual registers by providing the desired address on the SDI pin during the Read cycle.

The product (or products) mentioned in this data sheet are no longer being manufactured and may not be ordered (OBS)

FIGURE 34. TIMING DIAGRAM FOR THE MICROPROCESSOR SERIAL INTERFACE

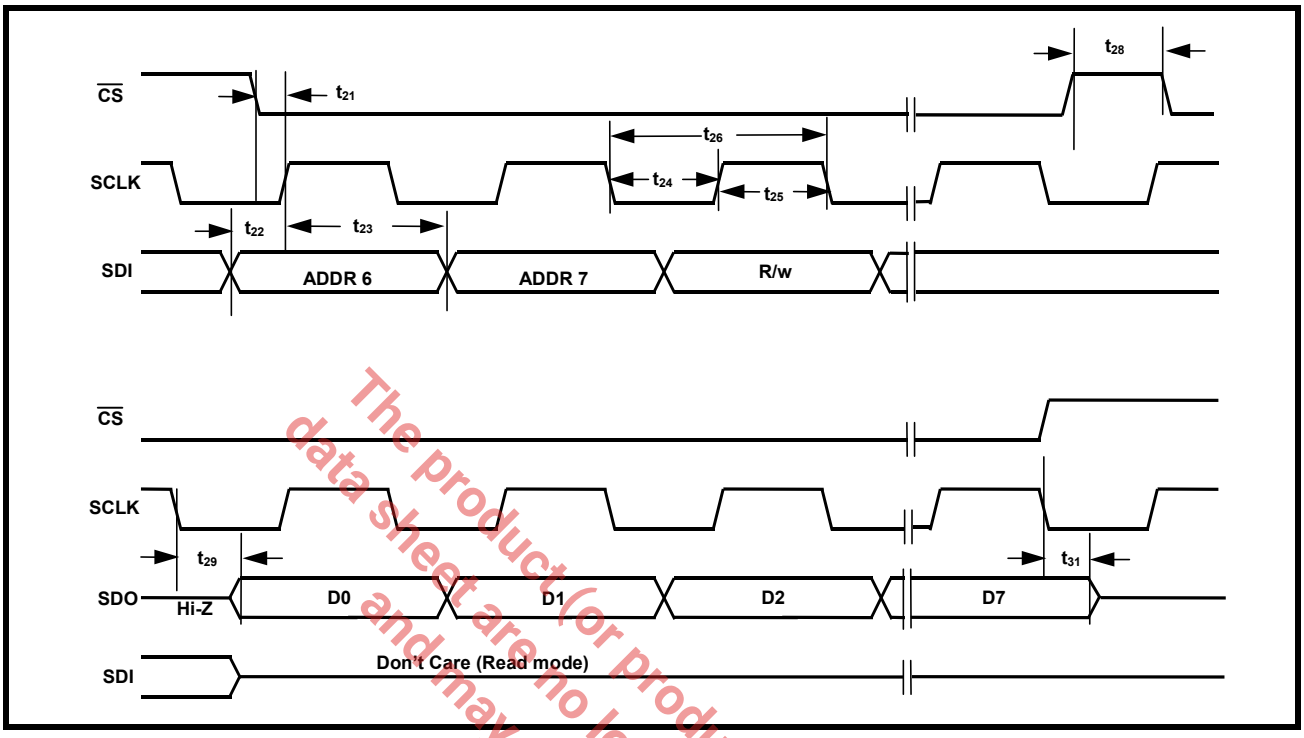

The product(or products) mentioned in this data sheet are no longer being manufactured and may not be ordered (OBS)

TABLE 12: MICROPROCESSOR SERIAL INTERFACE TIMINGS (T_A = 25^{0}C, V_{DD}=3.3V± 5% AND LOAD = 10PF)

SYMBOL	PARAMETER	MIN.	TYP.	MAX	UNITS
t_{21}	$\overline{CS}$ Low to Rising Edge of SClk	5			ns
t_{22}	SDI to Rising Edge of SClk	5			ns
t_{23}	SDI to Rising Edge of SClk Hold Time	5			ns
t_{24}	SClk "Low" Time	20			ns
t_{25}	SClk "High" Time	20			ns
t_{26}	SClk Period	40			ns
t_{28}	$\overline{CS}$ Inactive Time	40			ns
t_{29}	Falling Edge of SClk to SDO Valid Time			5	ns
t_{31}	Rising edge of $\overline{CS}$ to High Z			5	ns

6.2 Parallel Microprocessor Interface Block

The Parallel Microprocessor Interface section supports communication between the local microprocessor (µP) and the LIU. The XRT83VSH38 supports an Intel asynchronous interface and Motorola 68K asynchronous interface. The microprocessor interface is selected by the state of the µPTS[2:1] input pins. Selecting the microprocessor interface is shown in Table 13.

TABLE 13: SELECTING THE MICROPROCESSOR INTERFACE MODE

µPTS[2:1]	MICROPROCESSOR MODE
0h (00)	Intel 68HC11, 8051, 80C188 (Asynchronous)
1h (01)	Motorola 68K (Asynchronous)

The XRT83VSH38 uses multipurpose pins to configure the device appropriately. The local µP configures the LIU by writing data into specific addressable, on-chip Read/Write registers. The microprocessor interface provides the signals which are required for a general purpose microprocessor to read or write data into these registers. The microprocessor interface also supports polled and interrupt driven environments. A simplified block diagram of the microprocessor is shown in Figure 35.

The product (or products) mentioned in this data sheet are no longer being manufactured and may not be ordered (OBS)

FIGURE 35. SIMPLIFIED BLOCK DIAGRAM OF THE MICROPROCESSOR INTERFACE BLOCK

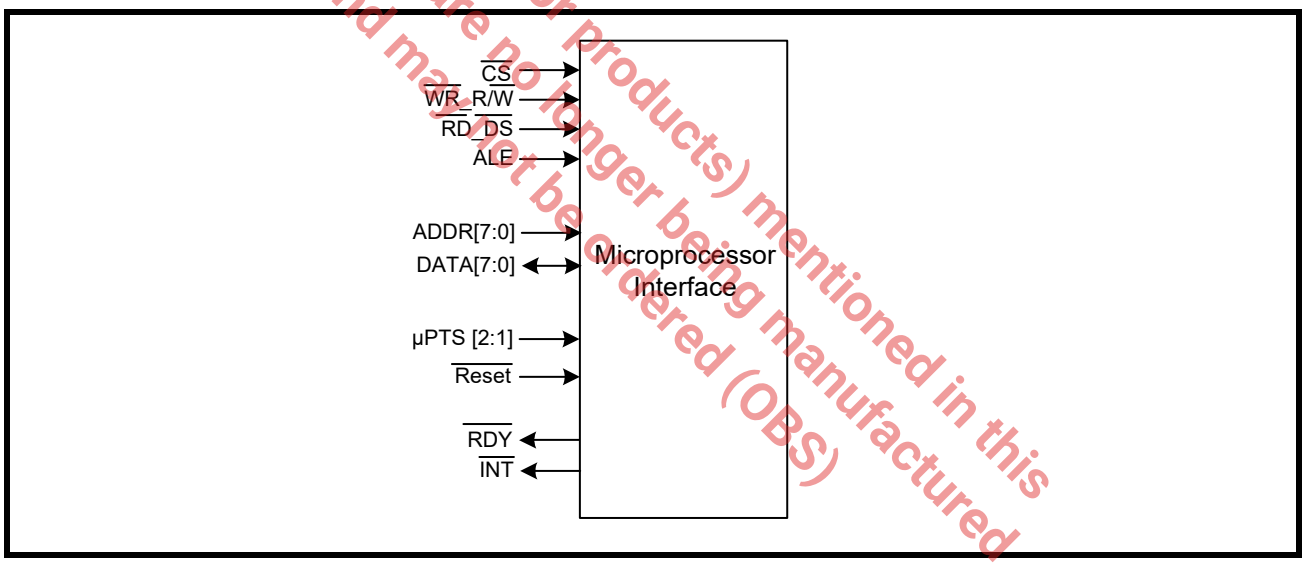

6.3 The Microprocessor Interface Block Signals

The LIU may be configured into different operating modes and have its performance monitored by software through a standard microprocessor using data, address and control signals. These interface signals are described below in **Table 14**, **Table 15**, and **Table 16**. The microprocessor interface can be configured to operate in Intel mode or Motorola mode. When the microprocessor interface is operating in Intel mode, some of the control signals function in a manner required by the Intel 80xx family of microprocessors. Likewise, when the microprocessor interface is operating in Motorola mode, then these control signals function in a manner as required by the Motorola microprocessors. (For using a Motorola 68K asynchronous processor, see **Figure 37** and **Table 18**) **Table 14** lists and describes those microprocessor interface signals whose role is constant across the two modes. **Table 15** describes the role of some of these signals when the microprocessor interface is operating in the Intel mode. Likewise, **Table 16** describes the role of these signals when the microprocessor interface is operating in the Motorola Power PC mode.

TABLE 14: XRT83VSH38 MICROPROCESSOR INTERFACE SIGNALS THAT EXHIBIT CONSTANT ROLES IN BOTH INTEL AND MOTOROLA MODES

PIN NAME	TYPE	DESCRIPTION
µPTS[2:1]	I	**Microprocessor Interface Mode Select Input pins** These two pins are used to specify the microprocessor interface mode. The relationship between the state of these two input pins, and the corresponding microprocessor mode is presented in **Table 13**.
DATA[7:0]	I/O	**Bi-Directional Data Bus for register "Read" or "Write" Operations.**
ADDR[7:0]	I	**Eight-Bit Address Bus Inputs** The XRT83VSH38 LIU microprocessor interface uses a direct address bus. This address bus is provided to permit the user to select an on-chip register for Read/Write access.
$\overline{CS}$	I	**Chip Select Input** This active low signal selects the microprocessor interface of the XRT83VSH38 LIU and enables Read/Write operations with the on-chip register locations.

TABLE 15: INTEL MODE: MICROPROCESSOR INTERFACE SIGNALS

XRT83VSH38 PIN NAME	INTEL EQUIVALENT PIN	TYPE	DESCRIPTION
ALE	ALE	I	**Address-Latch Enable:** This active high signal is used to latch the contents on the address bus ADDR[7:0]. The contents of the address bus are latched into the ADDR[7:0] inputs on the falling edge of ALE.
$\overline{RD}$_DS	$\overline{RD}$	I	**Read Signal:** This active low input functions as the read signal from the local µP. When this pin is pulled "Low" (if $\overline{CS}$ is "Low") the LIU is informed that a read operation has been requested and begins the process of the read cycle.
$\overline{WR}$_R/$\overline{W}$	$\overline{WR}$	I	**Write Signal:** This active low input functions as the write signal from the local µP. When this pin is pulled "Low" (if $\overline{CS}$ is "Low") the LIU is informed that a write operation has been requested and begins the process of the write cycle.
$\overline{RDY}$	$\overline{RDY}$	O	**Ready Output:** This active low signal is provided by the LIU device. It indicates that the current read or write cycle is complete, and the LIU is waiting for the next command.

The product (or products) mentioned in this data sheet are no longer being manufactured and may not be ordered (OPS)

TABLE 16: MOTOROLA MODE: MICROPROCESSOR INTERFACE SIGNALS

XRT83VSH38 PIN NAME	MOTOROLA EQUIVALENT PIN	TYPE	DESCRIPTION
ALE	AS	I	**Address Strobe:** This active high signal is used to latch the contents on the address bus ADDR[7:0]. The contents of the address bus are latched into the ADDR[7:0] inputs on the falling edge of AS.
$\overline{WR}$_R/$\overline{W}$	R/$\overline{W}$	I	**Read/$\overline{Write}$:** This input pin from the local µP is used to inform the LIU whether a Read or Write operation has been requested. When this pin is pulled "High", DS will initiate a read operation. When this pin is pulled "Low", DS will initiate a write operation.
$\overline{RD}$_DS	DS	I	**Data Strobe:** This active low input functions as the read or write signal from the local µP dependent on the state of R/$\overline{W}$. When DS is pulled "Low" (If $\overline{CS}$ is "Low") the LIU begins the read or write operation.
$\overline{RDY}$	$\overline{DTACK}$	O	**Data Transfer Acknowledge:** This active low signal is provided by the LIU device. It indicates that the current read or write cycle is complete, and the LIU is waiting for the next command.

The product (or products) mentioned in this data sheet are no longer being manufactured and may not be ordered (OBS)

6.4 Intel Mode Programmed I/O Access (Asynchronous)

If the LIU is interfaced to an Intel type µP, then it should be configured to operate in the Intel mode. Intel type Read and Write operations are described below.

Intel Mode Read Cycle

Whenever an Intel-type µP wishes to read the contents of a register, it should do the following.

1. Place the address of the target register on the address bus input pins ADDR[7:0].
2. While the µP is placing this address value on the address bus, the address decoding circuitry should assert the $\overline{CS}$ pin of the LIU, by toggling it "Low". This action enables further communication between the µP and the LIU microprocessor interface block.
3. Toggle the ALE input pin "High". This step enables the address bus input drivers, within the microprocessor interface block of the LIU.
4. The µP should then toggle the ALE pin "Low". This step causes the LIU to latch the contents of the address bus into its internal circuitry. At this point, the address of the register has now been selected.
5. Next, the µP should indicate that this current bus cycle is a Read operation by toggling the $\overline{RD}$ input pin "Low". This action also enables the bi-directional data bus output drivers of the LIU.
6. After the µP toggles the Read signal "Low", the LIU will toggle the $\overline{RDY}$ output pin "Low". The LIU does this in order to inform the µP that the data is available to be read by the µP, and that it is ready for the next command.
7. After the µP detects the $\overline{RDY}$ signal and has read the data, it can terminate the Read Cycle by toggling the $\overline{RD}$ input pin "High".

NOTE: *$\overline{ALE}$ can be tied "High" if this signal is not available.*

The Intel Mode Write Cycle

Whenever an Intel type µP wishes to write a byte or word of data into a register within the LIU, it should do the following.

1. Place the address of the target register on the address bus input pins ADDR[7:0].
2. While the µP is placing this address value on the address bus, the address decoding circuitry should assert the $\overline{CS}$ pin of the LIU, by toggling it "Low". This action enables further communication between the µP and the LIU microprocessor interface block.
3. Toggle the ALE input pin "High". This step enables the address bus input drivers, within the microprocessor interface block of the LIU.
4. The µP should then toggle the ALE pin "Low". This step causes the LIU to latch the contents of the address bus into its internal circuitry. At this point, the address of the register has now been selected.
5. The µP should then place the byte or word that it intends to write into the target register, on the bi-directional data bus DATA[7:0].
6. Next, the µP should indicate that this current bus cycle is a Write operation by toggling the $\overline{WR}$ input pin "Low". This action also enables the bi-directional data bus input drivers of the LIU.
7. After the µP toggles the Write signal "Low", the LIU will toggle the $\overline{RDY}$ output pin "Low". The LIU does this in order to inform the µP that the data has been written into the internal register location, and that it is ready for the next command.

NOTE: *$\overline{ALE}$ can be tied "High" if this signal is not available.*

The Intel Read and Write timing diagram is shown in **Figure 36**. The timing specifications are shown in **Table 17**.

The product (or products) mentioned in this data sheet are no longer being manufactured and may not be ordered (OBS)

FIGURE 36. INTEL MP INTERFACE SIGNALS DURING PROGRAMMED I/O READ AND WRITE OPERATIONS

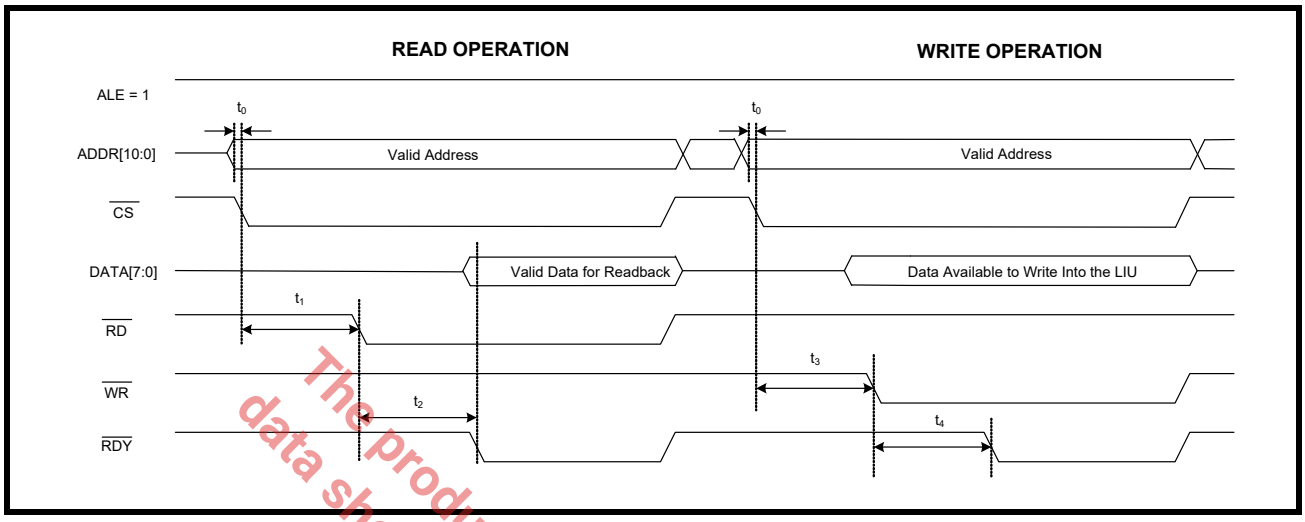

TABLE 17: INTEL MICROPROCESSOR INTERFACE TIMING SPECIFICATIONS

SYMBOL	PARAMETER	MIN	MAX	UNITS
t_0	Valid Address to $\overline{CS}$ Falling Edge	0	-	ns
t_1	$\overline{CS}$ Falling Edge to $\overline{RD}$ Assert	10	-	ns
t_2	$\overline{RD}$ Assert to $\overline{RDY}$ Assert	-	90	ns
NA	$\overline{RD}$ Pulse Width (t_2)	90	-	ns
t_3	$\overline{CS}$ Falling Edge to $\overline{WR}$ Assert	10	-	ns
t_4	$\overline{WR}$ Assert to $\overline{RDY}$ Assert	-	90	ns
NA	$\overline{WR}$ Pulse Width (t_4)	90	-	ns

The product (or products) mentioned in this data sheet are no longer being manufactured and may not be ordered (OBS)

6.5 Motorola Mode Programmed I/O Access (Asynchronous)

If the LIU is interfaced to a Motorola type µP, it should be configured to operate in the Motorola mode. Motorola type programmed I/O Read and Write operations are described below.

Motorola Mode Read Cycle

Whenever a Motorola type µP wishes to read the contents of a register, it should do the following.

1. Place the address of the target register on the address bus input pins ADDR[7:0].
2. While the µP is placing this address value on the address bus, the address decoding circuitry should assert the $\overline{CS}$ pin of the LIU, by toggling it "Low". This action enables further communication between the µP and the LIU microprocessor interface block.
3. The µP should then toggle the AS pin "Low". This step causes the LIU to latch the contents of the address bus into its internal circuitry. At this point, the address of the register has now been selected.
4. Next, the µP should indicate that this current bus cycle is a Read operation by pulling the R/$\overline{W}$ input pin "High".
5. Toggle the DS input pin "Low". This action enables the bi-directional data bus output drivers of the LIU.
6. After the µP toggles the DS signal "Low", the LIU will toggle the $\overline{DTACK}$ output pin "Low". The LIU does this in order to inform the µP that the data is available to be read by the µP, and that it is ready for the next command.
7. After the µP detects the $\overline{DTACK}$ signal and has read the data, it can terminate the Read Cycle by toggling the DS input pin "High".

Motorola Mode Write Cycle

Whenever a motorola type µP wishes to write a byte or word of data into a register within the LIU, it should do the following.

1. Place the address of the target register on the address bus input pins ADDR[7:0].
2. While the µP is placing this address value on the address bus, the address decoding circuitry should assert the $\overline{CS}$ pin of the LIU, by toggling it "Low". This action enables further communication between the µP and the LIU microprocessor interface block.
3. The µP should then toggle the AS pin "Low". This step causes the LIU to latch the contents of the address bus into its internal circuitry. At this point, the address of the register has now been selected.
4. Next, the µP should indicate that this current bus cycle is a Write operation by pulling the R/$\overline{W}$ input pin "Low".
5. Toggle the DS input pin "Low". This action enables the bi-directional data bus output drivers of the LIU.
6. After the µP toggles the DS signal "Low", the LIU will toggle the $\overline{DTACK}$ output pin "Low". The LIU does this in order to inform the µP that the data has been written into the internal register location, and that it is ready for the next command.
7. After the µP detects the $\overline{DTACK}$ signal and has read the data, it can terminate the Read Cycle by toggling the DS input pin "High".

The Motorola Read and Write timing diagram is shown in **Figure 37**. The timing specifications are shown in **Table 18**.

The Product (or products) mentioned in this data sheet are no longer being manufactured and may not be ordered (OBS)

FIGURE 37. MOTOROLA 68K MP INTERFACE SIGNALS DURING PROGRAMMED I/O READ AND WRITE OPERATIONS

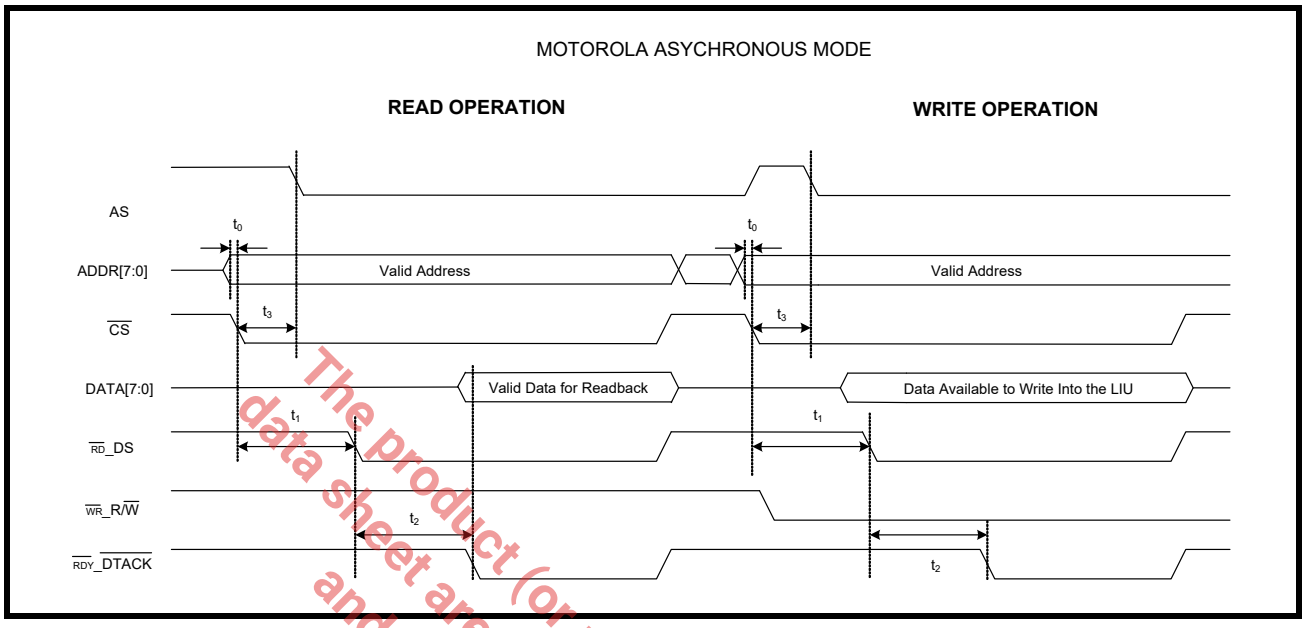

TABLE 18: MOTOROLA 68K MICROPROCESSOR INTERFACE TIMING SPECIFICATIONS

SYMBOL	PARAMETER	MIN	MAX	UNITS
t_0	Valid Address to $\overline{CS}$ Falling Edge	0	-	ns
t_1	$\overline{CS}$ Falling Edge to $\overline{DS}$ (Pin $\overline{RD}$_DS) Assert	65	-	ns
t_2	DS Assert to $\overline{DTACK}$ Assert	-	90	ns
NA	DS Pulse Width (t_2)	90	-	ns
t_3	$\overline{CS}$ Falling Edge to $\overline{AS}$ (Pin ALE) Falling Edge	0	-	ns

The product (or products) mentioned in this data sheet are no longer being manufactured and may not be ordered (OBS)

Table 19: Microprocessor Register Address (ADDR[7:0])

Register Number	Address (Hex)	Function
0 - 15	0x00 - 0x0F	Channel 0 Control Registers
16 - 31	0x10 - 0x1F	Channel 1 Control Registers
32 - 47	0x20 - 0x2F	Channel 2 Control Registers
48 - 63	0x30 - 0x3F	Channel 3 Control Registers
64 - 79	0x40 - 0x4F	Channel 4 Control Registers
80 - 95	0x50 - 0x5F	Channel 5 Control Registers
96 - 111	0x60 - 0x6F	Channel 6 Control Registers
112 - 127	0x70 - 0x7F	Channel 7 Control Registers
128 - 142	0x80 - 0x8E	Global Control Registers Applied to All 8 Channels
192	0xC0	Global Control Register Applied to All 8 Channels
143 - 253	0x8F - 0xFD	R/W Registers Reserved for Testing (Except 0xC0h)
254	0xFE	Device "ID"
255	0xFF	Device "Revision ID"

The product (or products) mentioned in this data sheet are no longer being manufactured and may not be ordered (OBS)

Table 20: Microprocessor Register Channel Description

Reg	ADDR	Type	D7	D6	D5	D4	D3	D2	D1	D0
Channel 0 Control Registers (0x00 - 0x0F)										
0	0x00	R/W	QRSS/PRBS	PRBS_Rx/$\overline{\text{Tx}}$	RxON	EQC4	EQC3	EQC2	EQC1	EQC0
1	0x01	R/W	RxTSEL	TxTSEL	TERSEL1	TERSEL0	JASEL1	JASEL0	JABW	FIFOS
2	0x02	R/W	INVQRSS	TxTEST2	TxTEST1	TxTEST0	TxON	LOOP2	LOOP1	LOOP0
3	0x03	R/W	Reserved	Reserved	CODES	RxRES1	RxRES0	INSBPV	INSBER	Reserved
4	0x04	R/W	Reserved	DMOIE	FLSIE	LCV_OFIE	Reserved	AISIE	RLOSIE	QRPDIE
5	0x05	RO	Reserved	DMOD	FLSD	LCV_OFD	Reserved	AISD	RLOS	QRPD
6	0x06	RUR	Reserved	DMOIS	FLSIS	LCV_OFIS	Reserved	AISIS	RLOSIS	QRPDIS
7	0x07	RO	Reserved	Reserved	Reserved	Reserved	Reserved	Reserved	Reserved	Reserved
8	0x08	R/W	Reserved	1SEG6	1SEG5	1SEG4	1SEG3	1SEG2	1SEG1	1SEG0
9	0x09	R/W	Reserved	2SEG6	2SEG5	2SEG4	2SEG3	2SEG2	2SEG1	2SEG0
10	0x0A	R/W	Reserved	3SEG6	3SEG5	3SEG4	3SEG3	3SEG2	3SEG1	3SEG0
11	0x0B	R/W	Reserved	4SEG6	4SEG5	4SEG4	4SEG3	4SEG2	4SEG1	4SEG0
12	0x0C	R/W	Reserved	5SEG6	5SEG5	5SEG4	5SEG3	5SEG2	5SEG1	5SEG0
13	0x0D	R/W	Reserved	6SEG6	6SEG5	6SEG4	6SEG3	6SEG2	6SEG1	6SEG0
14	0x0E	R/W	Reserved	7SEG6	7SEG5	7SEG4	7SEG3	7SEG2	7SEG1	7SEG0
15	0x0F	R/W	Reserved	8SEG6	8SEG5	8SEG4	8SEG3	8SEG2	8SEG1	8SEG0

TABLE 20: MICROPROCESSOR REGISTER CHANNEL DESCRIPTION

REG	ADDR	TYPE	D7	D6	D5	D4	D3	D2	D1	D0
Channel (1 -7) Control Registers (0x10 - 0x7F) See Channel 0										
Global Control Registers for All 8 Channels										
128	0x80	R/W	SR/DR	ATAOS	RCLKE	TCLKE	DATAP	Reserved	GIE	SRESET
129	0x81	R/W	LCV_OF	CLKSEL2	CLKSEL1	CLKSEL0	MCLKrate	RxMUTE	EXLOS	ICT
130	0x82	R/W	TxONCNTL	TERCNTL	Reserved	Reserved	Reserved	Reserved	Reserved	Reserved
131	0x83	R/W	Reserved	Reserved	Reserved	Reserved	SL1	SL0	Reserved	Reserved
140	0x8C	R/W	Reserved	Reserved	Reserved	Reserved	LCVCH3	LCVCH2	LCVCH1	LCVCH0
141	0x8D	R/W	Reserved	Reserved	Reserved	allRST	allUPDATE	BYTEsel	chUPDATE	chRST
142	0x8E	RO	LCVCNT7	LCVCNT6	LCVCNT5	LCVCNT4	LCVCNT3	LCVCNT2	LCVCNT1	LCVCNT0
192	0xC0	R/W	Reserved	Reserved	Reserved	Reserved	Reserved	Reserved	Reserved	E1arben
R/W Registers Reserved for Testing (0x8F - 0xFD) Except 0xC0h										
254	0xFE	RO	**Device "ID"**							
255	0xFF	RO	**Device "Revision ID"**							

The product (or products) mentioned in this data sheet are no longer being manufactured and may not be ordered (OBS)

TABLE 21: MICROPROCESSOR REGISTER 0X00H BIT DESCRIPTION

CHANNEL 0-7 (0X00H-0X70H)				
BIT	**NAME**	**FUNCTION**	Register Type	Default Value (HW reset)
D7	QRSS/ PRBS	**QRSS/PRBS Select Bits** These bits are used to select between QRSS and PRBS. 1 = QRSS 0 = PRBS	R/W	0
D6	PRBS_Rx/ $\overline{Tx}$	**PRBS Receive/Transmit Select:** This bit is used to select where the output of the PRBS Generator is directed if PRBS generation is enabled. 0 = Normal Operation - PRBS generator is output on TTIP and TRING if PRBS generation is enabled. 1 = PRBS Generator is output on RPOS; RNEG is internally grounded, if PRBS generation is enabled. 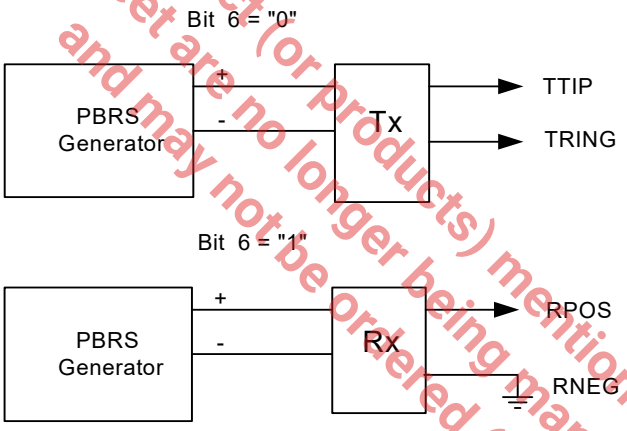 ***NOTE:*** *If PRBS generation is disabled, user should set this bit to '0' for normal operation.*	R/W	0
D5	RxON	**Receiver ON/OFF** Upon power up, the receiver is powered OFF. RxON is used to turn the receiver ON or OFF if the hardware pin RxON is pulled "High". If the hardware pin is pulled "Low", all receivers are turned off. 0 = Receiver is Powered Off 1 = Receiver is Powered On	R/W	0
D4 D3 D2 D1 D0	EQC4 EQC3 EQC2 EQC1 EQC0	**Cable Length Setting** The equalizer control bits are shown in **Table 22** below.	R/W	0 0 0 0 0

The product (or products) mentioned in this data sheet are no longer being manufactured and may not be ordered (OBS)

TABLE 22: CABLE LENGTH SETTING

EQC[4:0]	T1/E1 MODE/RECEIVE SENSITIVITY	TRANSMIT LBO	CABLE	CODING
0x08h	T1 Short Haul/15dB	0 to 133 feet (0.6dB)	100Ω TP	B8ZS
0x09h	T1 Short Haul/15dB	133 to 266 feet (1.2dB)	100Ω TP	B8ZS
0x0Ah	T1 Short Haul/15dB	266 to 399 feet (1.8dB)	100Ω TP	B8ZS
0x0Bh	T1 Short Haul/15dB	399 to 533 feet (2.4dB)	100Ω TP	B8ZS
0x0Ch	T1 Short Haul/15dB	533 to 655 feet (3.0dB)	100Ω TP	B8ZS
0x0Dh	T1 Short Haul/15dB	Arbitrary Pulse	100Ω TP	B8ZS
0x1Ch	E1 Short Haul/15dB	ITU G.703	75Ω Coax	HDB3
0x1Dh	E1 Short Haul/15dB	ITU G.703	120Ω TP	HDB3

The product(or products) mentioned in this data sheet are no longer being manufactured and may not be ordered (OBS)

TABLE 23: MICROPROCESSOR REGISTER 0X01H BIT DESCRIPTION

CHANNEL 0-7 (0X01H-0X71H)				
BIT	NAME	FUNCTION	Register Type	Default Value (HW reset)
D7	RxTSEL	**Receive Termination Select** Upon power up, the receiver is in "High" impedance. RxTSEL is used to switch between the internal termination and "High" impedance. 0 = "High" Impedance 1 = Internal Termination	R/W	0
D6	TxTSEL	**Transmit Termination Select** Upon power up, the transmitter is in "High" impedance. TxTSEL is used to switch between the internal termination and "High" impedance. 0 = "High" Impedance 1 = Internal Termination	R/W	0
D5 D4	TERSEL1 TERSEL0	**Receive Line Impedance Select** TERSEL[1:0] are used to select the line impedance for T1/J1/E1.	R/W	0 0

TERSEL1	TERSEL0	LINE IMPEDANCE
0	0	100Ω
0	1	110Ω
1	0	75Ω
1	1	120Ω

TABLE 23: MICROPROCESSOR REGISTER 0X01H BIT DESCRIPTION

CHANNEL 0-7 (0X01H-0X71H)				
BIT	**NAME**	**FUNCTION**	Register Type	Default Value (HW reset)
D3 D2	JASEL1 JASEL0	**Jitter Attenuator Select** JASEL[1:0] are used to select the jitter attenuator in the transmit or receive path. By default, the jitter attenuator is disabled. **JASEL1 / JASEL0 / JA PATH** 0 / 0 / Disabled 0 / 1 / Transmit Path 1 / 0 / Receive Path 1 / 1 / Receive Path	R/W	0
D1	JABW	**Jitter Bandwidth (E1 Mode Only, T1 is permanently set to 3Hz)** The jitter bandwidth is a global setting that is applied to both the receiver and transmitter jitter attenuator. 0 = 10Hz 1 = 1.5Hz	R/W	0
D0	FIFOS	**FIFO Depth Select** The FIFO depth select is used to configure the part for a 32-bit or 64-bit FIFO (within the jitter attenuator blocks). The delay of the FIFO is equal to ½ the FIFO depth. This is a global setting that is applied to both the receiver and transmitter FIFO. 0 = 32-Bit 1 = 64-Bit	R/W	0

The product(s) mentioned in this data sheet are no longer being manufactured and may not be ordered (OBS)

TABLE 24: MICROPROCESSOR REGISTER 0X02H BIT DESCRIPTION

CHANNEL 0-7 (0X02H-0X72H)				
BIT	**NAME**	**FUNCTION**	Register Type	Default Value (HW reset)
D7	INVQRSS	**QRSS inversion** INVQRSS is used to invert the transmit QRSS pattern set by the TxTEST[2:0] bits. By default, INVQRSS is disabled and the QRSS will be transmitted with normal polarity. 0 = Disabled 1 = Enabled	R/W	0
D6 D5 D4	TxTEST2 TxTEST1 TxTEST0	**Test Code Pattern** TxTEST[2:0] are used to select a diagnostic test pattern to the line (transmit outputs). 0XX = No Pattern 100 = Tx QRSS 101 = Tx TAOS 110 = Reserved 111 = Reserved	R/W	0 0 0
D3	TxOn	**Transmit ON/OFF** Upon power up, the transmitters are powered off. This bit is used to turn the transmitter for this channel On or Off if the TxONCNTL bit is "Low". If the TxONCNTL bit is "High", the TxON hardware pins control the transmitter activity. 0 = Transmitter is Powered OFF 1 = Transmitter is Powered ON	R/W	0
D2 D1 D0	LOOP2 LOOP1 LOOP0	**Loopback Diagnostic Select** LOOP[2:0] are used to select the loopback mode. 0XX = No Loopback 100 = Dual Loopback 101 = Analog Loopback 110 = Remote Loopback 111 = Digital Loopback	R/W	0 0 0

The product (or products) mentioned in this data sheet are no longer being manufactured and may not be ordered (OBS)

TABLE 25: MICROPROCESSOR REGISTER 0X03H BIT DESCRIPTION

CHANNEL 0-7 (0X03H-0X73H)				
BIT	**NAME**	**FUNCTION**	Register Type	Default Value (HW reset)
D[7:6]	Reserved	This Register Bit is Not Used.		
D5	CODES	**Encoding/Decoding Select (Single Rail Mode Only)** 0 = HDB3 (E1), B8ZS (T1) 1 = AMI Coding	R/W	0

TABLE 25: MICROPROCESSOR REGISTER 0X03H BIT DESCRIPTION

CHANNEL 0-7 (0X03H-0X73H)				
BIT	NAME	FUNCTION	Register Type	Default Value (HW reset)
D4 D3	RxRES1 RxRES0	**Receive External Fixed Resistor** RxRES[1:0] are used to select the value for a high precision external resistor to improve return loss. 00 = None 01 = 240Ω 10 = 210Ω 11 = 150Ω	R/W	0 0
D2	INSBPV	**Insert Bipolar Violation** When this bit transitions from a "0" to a "1", a bipolar violation will be inserted in the transmitted QRSS/PRBS pattern. The state of this bit will be sampled on the rising edge of TCLK. To ensure proper operation, it is recommended to write a "0" to this bit before writing a "1".	R/W	0
D1	INSBER	**Insert Bit Error** When this bit transitions from a "0" to a "1", a bit error will be inserted in the transmitted QRSS/PRBS pattern. The state of this bit will be sampled on the rising edge of TCLK. To ensure proper operation, it is recommended to write a "0" to this bit before writing a "1".	R/W	0
D0	Reserved			

The product (or products) mentioned in this data sheet are no longer being manufactured and may not be ordered (OBS)

TABLE 26: MICROPROCESSOR REGISTER 0X04H BIT DESCRIPTION

CHANNEL 0-7(0X04H-0X74H)				
BIT	NAME	FUNCTION	Register Type	Default Value (HW reset)
D7	Reserved	This Register Bit is Not Used.		
D6	DMOIE	**Digital Monitor Output Interrupt Enable** 0 = Masks the DMO function 1 = Enables Interrupt Generation	R/W	0
D5	FLSIE	**FIFO Limit Status Interrupt Enable** 0 = Masks the FLS function 1 = Enables Interrupt Generation	R/W	0
D4	LCV_OFIE	**Line Code Violation / Counter Overflow Interrupt Enable** 0 = Masks the LCV/OF function 1 = Enables Interrupt Generation	R/W	0
D3	Reserved	This Register Bit is Not Used.		

TABLE 26: MICROPROCESSOR REGISTER 0X04H BIT DESCRIPTION

CHANNEL 0-7(0X04H-0X74H)				
BIT	**NAME**	**FUNCTION**	Register Type	Default Value (HW reset)
D2	AISIE	**Alarm Indication Signal Interrupt Enable** 0 = Masks the AIS function 1 = Enables Interrupt Generation	R/W	0
D1	RLOSIE	**Receiver Loss of Signal Interrupt Enable** 0 = Masks the RLOS function 1 = Enables Interrupt Generation	R/W	0
D0	QRPDIE	**Quasi Random Signal Source Interrupt Enable** 0 = Masks the QRPD function 1 = Enables Interrupt Generation	R/W	0

NOTE: *The GIE bit in the global register 0xE0h must be set to "1" in addition to the individual register bits to enable the interrupt pin.*

TABLE 27: MICROPROCESSOR REGISTER 0X05H BIT DESCRIPTION

CHANNEL 0-7 (0X05H-0X75H)				
BIT	**NAME**	**FUNCTION**	Register Type	Default Value (HW reset)
D7	Reserved	This Register Bit is Not Used.		
D6	DMOD	**Digital Monitor Output Detection** The digital monitor output is always active regardless if the interrupt generation is disabled. This bit indicates the DMO activity. An interrupt will not occur unless the DMOIE is set to "1" in the channel register 0x04h and GIE is set to "1" in the global register 0xE0h. 0 = No Alarm 1 = Transmit output driver has failures	RO	0
D5	FLSD	**FIFO Limit Status Detection** The FIFO limit status is always active regardless if the interrupt generation is disabled. This bit indicates whether the RD/WR pointers are within 3-Bits. An interrupt will not occur unless the FLSIE is set to "1" in the channel register 0x04h and GIE is set to "1" in the global register 0xE0h. 0 = No Alarm 1 = RD/WR FIFO pointers are within ±3-Bits	RO	0

The product (or products) mentioned in this data sheet are no longer being manufactured and may not be ordered (OBS)

NOTE: *The GIE bit in the global register 0xE0h must be set to "1" in addition to the individual register bits to enable the interrupt pin.*

TABLE 27: MICROPROCESSOR REGISTER 0X05H BIT DESCRIPTION

CHANNEL 0-7 (0X05H-0X75H)				
BIT	**NAME**	**FUNCTION**	Register Type	Default Value (HW reset)
D4	LCV_OFD	**Line Code Violation / Counter Overflow Detection** This bit serves a dual purpose. By default, this bit monitors the line code violation activity. However, if bit 7 in register 0x81h is set to a "1", this bit monitors the overflow status of the internal LCV counter. An interrupt will not occur unless the LCV_OFIE is set to "1" in the channel register 0x04h and GIE is set to "1" in the global register 0x80h. 0 = No Alarm 1 = A line code violation, bipolar violation, or excessive zeros has occurred	RO	0
D3	Reserved	This Register Bit is Not Used.		
D2	AISD	**Alarm Indication Signal Detection** The alarm indication signal detection is always active regardless if the interrupt generation is disabled. This bit indicates the AIS activity. An interrupt will not occur unless the AISIE is set to "1" in the channel register 0x04h and GIE is set to "1" in the global register 0xE0h. 0 = No Alarm 1 = An all ones signal is detected	RO	0
D1	RLOSD	**Receiver Loss of Signal Detection** The receiver loss of signal detection is always active regardless if the interrupt generation is disabled. This bit indicates the RLOS activity. An interrupt will not occur unless the RLOSIE is set to "1" in the channel register 0x04h and GIE is set to "1" in the global register 0xE0h. 0 = No Alarm 1 = An RLOS condition is present	RO	0
D0	QRPD	**Quasi Random Pattern Detection** The quasi random pattern detection is always active regardless if the interrupt generation is disabled. This bit indicates that a QRPD has been detected. An interrupt will not occur unless the QRPDIE is set to "1" in the channel register 0x04h and GIE is set to "1" in the global register 0xE0h. 0 = No Alarm 1 = A QRP is detected	RO	0

The product (or products) mentioned in this data sheet are no longer being manufactured and may not be ordered (OBS)

TABLE 28: MICROPROCESSOR REGISTER 0X06H BIT DESCRIPTION

CHANNEL 0-7 (0X06H-0X76H)				
BIT	**NAME**	**FUNCTION**	Register Type	Default Value (HW reset)
D7	Reserved	This Register Bit is Not Used.		
D6	DMOIS	**Digital Monitor Output Status** 0 = No change 1 = Change in status occurred	RUR	0
D5	FLSIS	**FIFO Limit Status** 0 = No change 1 = Change in status occurred	RUR	0
D4	LCV_OFIS	**Line Code Violation / Overflow Status** 0 = No change 1 = Change in status occurred	RUR	0
D3	Reserved	This Register Bit is Not Used.		
D2	AISIS	**Alarm Indication Signal Status** 0 = No change 1 = Change in status occurred	RUR	0
D1	RLOSIS	**Receiver Loss of Signal Status** 0 = No change 1 = Change in status occurred	RUR	0
D0	QRPDIS	**Quasi Random Pattern Detection Status** 0 = No change 1 = Change in status occurred	RUR	0

NOTE: *Any change in status will generate an interrupt (if enabled in channel register 0x04h and GIE is set to "1" in the global register 0x80h). The status registers are reset upon read (RUR).*

The product(s) mentioned in this data sheet are no longer being manufactured and may not be ordered (OBS)

TABLE 29: MICROPROCESSOR REGISTER 0X08H BIT DESCRIPTION

CHANNEL 0-7 (0X08H-0X78H)				
BIT	**NAME**	**FUNCTION**	Register Type	Default Value (HW reset)
D7	Reserved	This Register Bit is Not Used	X	0
D6 D5 D4 D3 D2 D1 D0	1SEG6 1SEG5 1SEG4 1SEG3 1SEG2 1SEG1 1SEG0	**Arbitrary Pulse Generation** The transmit output pulse is divided into 8 individual segments. This register is used to program the first segment which corresponds to the overshoot of the pulse amplitude. There are four segments for the top portion of the pulse and four segments for the bottom portion of the pulse. Segment number 5 corresponds to the undershoot of the pulse. The MSB of each segment is the sign bit. Bit 6 = 0 = Negative Direction Bit 6 = 1 = Positive Direction	R/W	0 0 0 0 0 0 0

TABLE 30: MICROPROCESSOR REGISTER 0X09H BIT DESCRIPTION

CHANNEL 0-7 (0X09H-0X79H)				
BIT	**NAME**	**FUNCTION**	Register Type	Default Value (HW reset)
D7	Reserved	This Register Bit is Not Used	X	0
D[6:0]	2SEG[6:0]	**Segment Number Two, Same Description as Register 0x08h**	R/W	

TABLE 31: MICROPROCESSOR REGISTER 0X0AH BIT DESCRIPTION

CHANNEL 0-7 (0X0AH-0X7AH)				
BIT	**NAME**	**FUNCTION**	Register Type	Default Value (HW reset)
D7	Reserved	This Register Bit is Not Used	X	0
D[6:0]	3SEG[6:0]	**Segment Number Three, Same Description as Register 0x08h**	R/W	

The product(or products) mentioned in this data sheet are no longer being manufactured and may not be ordered (OBS)

TABLE 32: MICROPROCESSOR REGISTER 0X0BH BIT DESCRIPTION

CHANNEL 0-7 (0X0BH-0X7BH)				
BIT	**NAME**	**FUNCTION**	Register Type	Default Value (HW reset)
D7	Reserved	This Register Bit is Not Used	X	0
D[6:0]	4SEG[6:0]	**Segment Number Four, Same Description as Register 0x08h**	R/W	

TABLE 33: MICROPROCESSOR REGISTER 0X0CH BIT DESCRIPTION

CHANNEL 0-7 (0X0CH-0X7CH)				
BIT	**NAME**	**FUNCTION**	Register Type	Default Value (HW reset)
D7	Reserved	This Register Bit is Not Used	X	0
D[6:0]	5SEG[6:0]	**Segment Number Five, Same Description as Register 0x08h**	R/W	

TABLE 34: MICROPROCESSOR REGISTER 0X0DH BIT DESCRIPTION

CHANNEL 0-7 (0X0DH-0X7DH)				
BIT	**NAME**	**FUNCTION**	Register Type	Default Value (HW reset)
D7	Reserved	This Register Bit is Not Used	X	0
D[6:0]	6SEG[6:0]	**Segment Number Six, Same Description as Register 0x08h**	R/W	

TABLE 35: MICROPROCESSOR REGISTER 0X0EH BIT DESCRIPTION

CHANNEL 0-7 (0X0EH-0X7EH)				
BIT	**NAME**	**FUNCTION**	Register Type	Default Value (HW reset)
D7	Reserved	This Register Bit is Not Used	X	0
D[6:0]	7SEG[6:0]	**Segment Number Seven, Same Description as Register 0x08h**	R/W	

The product (or products) mentioned in this data sheet are no longer being manufactured and may not be ordered (OBS)

TABLE 36: MICROPROCESSOR REGISTER 0X0FH BIT DESCRIPTION

CHANNEL 0-7 (0X0FH-0X7FH)				
BIT	**NAME**	**FUNCTION**	Register Type	Default Value (HW reset)
D7	Reserved	This Register Bit is Not Used	X	0
D[6:0]	8SEG[6:0]	**Segment Number Eight, Same Description as Register 0x08h**	R/W	

TABLE 37: MICROPROCESSOR REGISTER 0X80H, BIT DESCRIPTION

REGISTER ADDRESS 0X80H BIT #	NAME	FUNCTION	REGISTER TYPE	RESET VALUE
D7	SR/$\overline{DR}$	**Single-rail/Dual-rail Select:** Writing a “1” to this bit configures all 4channels in the XRT83VSH38 to operate in the Single-rail mode. Writing a “0” configures the XRT83VSH38 to operate in Dual-rail mode.	R/W	0
D6	ATAOS	**Automatic Transmit All Ones Upon RLOS:** Writing a “1” to this bit enables the automatic transmission of All "Ones" data to the line for the channel that detects an RLOS condition. Writing a “0” disables this feature.	R/W	0
D5	RCLKE	**Receive Clock Edge:** Writing a “1” to this bit selects receive output data of all channels to be updated on the negative edge of RCLK. Wring a “0” selects data to be updated on the positive edge of RCLK.	R/W	0
D4	TCLKE	**Transmit Clock Edge:** Writing a “0” to this bit selects transmit data at TPOS_n/TDATA_n and TNEG_n/CODES_n of all channels to be sampled on the falling edge of TCLK_n. Writing a “1” selects the rising edge of the TCLK_n for sampling.	R/W	0
D3	DATAP	**DATA Polarity:** Writing a “0” to this bit selects transmit input and receive output data of all channels to be active “High”. Writing a “1” selects an active “Low” state.	R/W	0
D2	Reserved			0
D1	GIE	**Global Interrupt Enable:** Writing a “1” to this bit globally enables interrupt generation for all channels. Writing a “0” disables interrupt generation.	R/W	0
D0	SRESET	**Software Reset µP Registers:** Writing a “1” to this bit longer than 10µs initiates a device reset through the microprocessor interface. All internal circuits are placed in the reset state with this bit set to a “1” except the microprocessor register bits.	R/W	0

The product(s) mentioned in this data sheet are no longer being manufactured and may not be ordered (OBS)

CLOCK SELECT REGISTER

The input clock source is used to generate all the necessary clock references internally to the LIU. The microprocessor timing is derived from a PLL output which is chosen by programming the Clock Select Bits and the Master Clock Rate in register 0x81h. Therefore, if the clock selection bits or the MCLRATE bit are being programmed, the frequency of the PLL output will be adjusted accordingly. During this adjustment, it is important to "Not" write to any other bit location within the same register while selecting the input/output clock frequency. For best results, register 0x81h can be broken down into two sub-registers with the MSB being bits D[7:3] and the LSB being bits D[2:0] as shown in **Figure 38**. Note: Bit D[7] is a reserved bit.

FIGURE 38. REGISTER 0X81H SUB REGISTERS

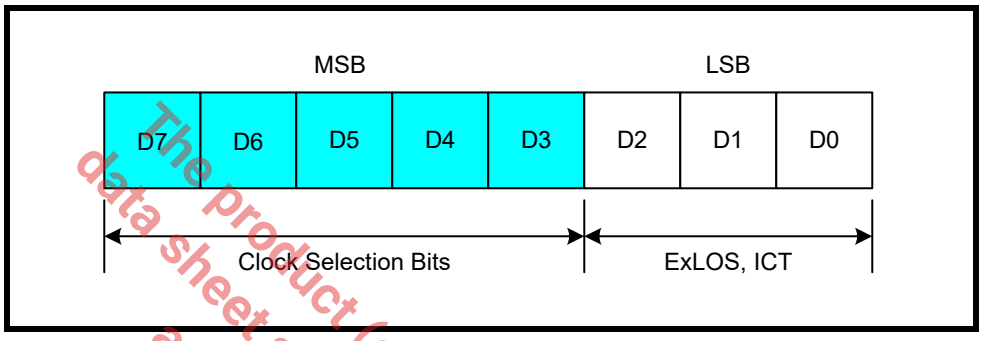

The product (or products) mentioned in this data sheet are no longer being manufactured and may not be ordered (OBS)

Programming Examples:

Example 1: Changing bits D[7:3]

If bits D[7:3] are the only values within the register that will change in a WRITE process, the microprocessor only needs to initiate ONE write operation.

Example 2: Changing bits D[2:0]

If bits D[2:0] are the only values within the register that will change in a WRITE process, the microprocessor only needs to initiate ONE write operation.

Example 3: Changing bits within the MSB and LSB

In this scenario, one must initiate TWO write operations such that the MSB and LSB do not change within ONE write cycle. It is recommended that the MSB and LSB be treated as two independent sub-registers. One can either change the clock selection (MSB) and then change bits D[2:0] (LSB) on the SECOND write, or vice-versa. No order or sequence is necessary.

TABLE 38: MICROPROCESSOR REGISTER 0X81H, BIT DESCRIPTION

REGISTER ADDRESS 0X81H BIT #	NAME	FUNCTION	REGISTER TYPE	RESET VALUE
D7	LCV_OF	**Line Code Violation / Over Flow Select** 0 = LCV_OFD monitors LCV activity 1 = LCV_OFD monitors OF activity	R/W	0
D6	CLKSEL2	**Clock Select Inputs for Master Clock Synthesizer bit 2:** In **Host** mode, CLKSEL[2:0] are input signals to a programmable frequency synthesizer that can be used to generate a master clock from an external accurate clock source according to the following table; MCLKE1 kHz / MCLKT1 kHz / CLKSEL2 / CLKSEL1 / CLKSEL0 / MCLKRATE / CLKOUT/ kHz 2048 / 2048 / 0 / 0 / 0 / 0 / 2048 2048 / 2048 / 0 / 0 / 0 / 1 / 1544 2048 / 1544 / 0 / 0 / 0 / 0 / 2048 1544 / 1544 / 0 / 0 / 1 / 1 / 1544 1544 / 1544 / 0 / 0 / 1 / 0 / 2048 2048 / 1544 / 0 / 0 / 1 / 1 / 1544 In **Hardware** mode, the state of these signals are ignored and the master frequency PLL is controlled by the corresponding **Hardware** pins.	R/W	0
D5	CLKSEL1	**Clock Select inputs for Master Clock Synthesizer bit 1:** See description of bit D6 for function of this bit.	R/W	0
D4	CLKSEL0	**Clock Select inputs for Master Clock Synthesizer bit 0:** See description of bit D6 for function of this bit.	R/W	0
D3	MCLKRATE	**Master clock Rate Select:** The state of this bit programs the Master Clock Synthesizer to generate the T1/J1 or E1 clock. The Master Clock Synthesizer will generate the E1 clock when MCLKRATE = “0”, and the T1/J1 clock when MCLKRATE = “1”.	R/W	0
D2	RXMUTE	**Receive Output Mute:** Writing a “1” to this bit, mutes receive outputs at RPOS/RDATA and RNEG/LCV pins to a “0” state for any channel that detects an RLOS condition. ***NOTE:*** *RCLK is not muted.*	R/W	0
D1	EXLOS	**Extended LOS:** Writing a “1” to this bit extends the number of zeros at the receive input of each channel before RLOS is declared to 4096 bits. Writing a “0” reverts to the normal mode (175+75 bits for T1 and 32 bits for E1).	R/W	0
D0	ICT	**In-Circuit-Testing:** Writing a “1” to this bit configures all the output pins of the chip in high impedance mode for In-Circuit-Testing. Setting the ICT bit to “1” is equivalent to connecting the **Hardware** $\overline{\text{ICT}}$ pin 88 to ground.	R/W	0

The product (or products) mentioned in this data sheet are no longer being manufactured and may not be ordered (OPS)

TABLE 39: MICROPROCESSOR REGISTER 0X82H BIT DESCRIPTION

GLOBAL REGISTER (0X82H)				
BIT	**NAME**	**FUNCTION**	Register Type	Default Value (HW reset)
D7	TxONCNTL	**Transmit On Control** This bit grants access to controlling the transmitter output activity. 0 = Register Bits 1 = Hardware Pins	R/W	0
D6	TERCNTL	**Receive Termination Select Control** This bit sets the LIU to control the RxTSEL function with either the individual channel register bit or the global hardware pin. 0 = Control of the receive termination is set to the register bits 1 = Control of the receive termination is set to the RxTSEL hardware pin	R/W	0
D[5:0]	Reserved	These Register Bits are Not Used	R/W	0

TABLE 40: MICROPROCESSOR REGISTER 0X83H BIT DESCRIPTION

GLOBAL REGISTER (0X83H)				
BIT	**NAME**	**FUNCTION**	Register Type	Default Value (HW reset)
D{7:4]	Reserved		R/W	0
D[3:2]	SL[1:0]	**Slicer Level Select** 00 = 60% 01 = 65% 10 = 70% 11 = 55%	R/W	00
D[1:0]	Reserved	These Register Bits are Not Used	R/W	0

The product (or products) mentioned in this data sheet are no longer being manufactured and may not be ordered (OBS)

TABLE 41: MICROPROCESSOR REGISTER 0X8CH BIT DESCRIPTION

GLOBAL REGISTER (0X8CH)				
BIT	**NAME**	**FUNCTION**	Register Type	Default Value (HW reset)
D7	Reserved	This Register Bit is Not Used	R/W	0
D6	Reserved	This Register Bit is Not Used	R/W	0
D5	Reserved	This Register Bit is Not Used	R/W	0
D4	Reserved	This Register Bit is Not Used	R/W	0
D3 D2 D1 D0	LCVCH3 LCVCH2 LCVCH1 LCVCH0	**Line Code Violation Counter Select** These bits are used to select which channel is to be addressed for reading the contents in register 0x8Eh. It is also used to address the counter for a given channel when performing an update or reset on a per channel basis. By default, Channel 0 is selected. 0000 = None 0001 = Channel 0 0010 = Channel 1 0011 = Channel 2 0100 = Channel 3 0101 = Channel 4 0110 = Channel 5 0111 = Channel 6 1000 = Channel 7	R/W	0 0 0 0

TABLE 42: MICROPROCESSOR REGISTER 0X8DH BIT DESCRIPTION

GLOBAL REGISTER (0X8DH)				
BIT	**NAME**	**FUNCTION**	Register Type	Default Value (HW reset)
D7	Reserved	This Register Bit is Not Used	R/W	0
D6	Reserved	This Register Bit is Not Used	R/W	0
D5	Reserved	This Register Bit is Not Used	R/W	0
D4	allRST	**LCV Counter Reset for All Channels** This bit is used to reset all internal LCV counters to their default state 0000h. This bit must be set to "1" for 1µS. 0 = Normal Operation 1 = Resets all Counters	R/W	0
D3	allUPDATE	**LCV Counter Update for All Channels** This bit is used to latch the contents of all counters into holding registers so that the value of each counter can be read. The channel is addressed by using bits D[3:0] in register 0x8Ch. 0 = Normal Operation 1 = Updates all Counters	R/W	0

The product (or products) mentioned in this data sheet are no longer being manufactured and may not be ordered (OBS)

TABLE 42: MICROPROCESSOR REGISTER 0X8DH BIT DESCRIPTION

GLOBAL REGISTER (0X8DH)				
BIT	**NAME**	**FUNCTION**	Register Type	Default Value (HW reset)
D2	BYTEsel	**LCV Counter Byte Select** This bit is used to select the MSB or LSB for Reading the contents of the LCV counter for a given channel. The channel is addressed by using bits D[3:0] in register 0x8Ch. By default, the LSB byte is selected. 0 = Low Byte 1 = High Byte	R/W	0
D1	chUPDATE	**LCV Counter Update Per Channel** This bit is used to latch the contents of the counter for a given channel into a holding register so that the value of the counter can be read. The channel is addressed by using bits D[3:0] in register 0x8Ch. 0 = Normal Operation 1 = Updates the Selected Channel	R/W	0
D0	chRESET	**LCV Counter Reset Per Channel** This bit is used to reset the LCV counter of a given channel to its default state 0000h. The channel is addressed by using bits D[3:0] in register 0x8Ch. This bit must be set to "1" for 1µS. 0 = Normal Operation 1 = Resets the Selected Channel	R/W	0

The product (or products) mentioned in this data sheet are no longer being manufactured and may not be ordered (OBS)

TABLE 43: MICROPROCESSOR REGISTER 0X8EH BIT DESCRIPTION

GLOBAL REGISTER (0X8EH)				
BIT	**NAME**	**FUNCTION**	Register Type	Default Value (HW reset)
D7	LCVCNT7	**Line Code Violation Byte Contents** These bits contain the LCV counter contents of the Byte selected by bit D2 in register 0x8Dh for a given channel. The channel is addressed by using bits D[3:0] in register 0x8Ch. By default, the contents contain the LSB, however no channel is selected..	R/W	0
D6	LCVCNT6			0
D5	LCVCNT5			0
D4	LCVCNT4			0
D3	LCVCNT3			0
D2	LCVCNT2			0
D1	LCVCNT1			0
D0	LCVCNT0			0

TABLE 44: MICROPROCESSOR REGISTER 0XC0H BIT DESCRIPTION

GLOBAL REGISTER (0XC0H)				
BIT	**NAME**	**FUNCTION**	Register Type	Default Value (HW reset)
D[7:1]	Reserved	These register bits are not used.	R/W	0
D0	E1Arben	**E1 Arbitrary Pulse Enable** This bit is used to enable the Arbitrary Pulse Generators for shaping the transmit pulse shape when E1 mode is selected. If this bit is set to "1", all 8 channels will be configured for the Arbitrary Mode. However, each channel is individually controlled by programming the channel registers 0xn8 through 0xnF, where n is the number of the channel. "0" = Disabled (Normal E1 Pulse Shape ITU G.703) "1" = Arbitrary Pulse Enabled	R/W	0

TABLE 45: MICROPROCESSOR REGISTER 0XFEH BIT DESCRIPTION

DEVICE "ID" REGISTER (0XFEH)				
BIT	**NAME**	**FUNCTION**	Register Type	Default Value (HW reset)
D7	Device "ID"	The device "ID" of the XRT83VSH38 short haul LIU is 0xF1h. Along with the revision "ID", the device "ID" is used to enable software to identify the silicon adding flexibility for system control and debug.	RO	1
D6				1
D5				1
D4				1
D3				0
D2				0
D1				0
D0				1

TABLE 46: MICROPROCESSOR REGISTER 0XFFH BIT DESCRIPTION

REVISION "ID" REGISTER (0XFFH)				
BIT	**NAME**	**FUNCTION**	Register Type	Default Value (HW reset)
D7	Revision "ID"	The revision "ID" of the XRT83VSH38 LIU is used to enable software to identify which revision of silicon is currently being tested. The revision "ID" for the first revision of silicon will be 0x01h.	RO	0
D6				0
D5				0
D4				0
D3				0
D2				0
D1				0
D0				1

The product(s) mentioned in this data sheet are no longer being manufactured and may not be ordered (OBS)

7.0 ELECTRICAL CHARACTERISTICS

TABLE 47: ABSOLUTE MAXIMUM RATINGS

Storage Temperature	-65°C to +150°C
Operating Temperature	-40°C to +85°C
Supply Voltage	-0.5V to +3.8V
Vin	-0.5V to +5.5V
Maximum Junction Temperature	125°C
Theta JA	24°C/W
Theta JC	10°C/W

The product(or products) mentioned in this data sheet are no longer being manufactured and may not be ordered (OBS)

TABLE 48: DC DIGITAL INPUT AND OUTPUT ELECTRICAL CHARACTERISTICS

VDD=3.3V ±5%, T_A=25°C, UNLESS OTHERWISE SPECIFIED					
PARAMETER	SYMBOL	MIN	TYP	MAX	UNITS
Power Supply Voltage	VDD	3.13	3.3	3.46	V
Input High Voltage	V_{IH}	2.0	-	5.0	V
Input Low Voltage	V_{IL}	-0.5	-	0.8	V
Output High Voltage IOH=2.0mA	V_{OH}	2.4	-		V
Output Low Voltage IOL=2.0mA	V_{OL}	-	-	0.4	V
Input Leakage Current	I_L	-	-	±10	µA
Input Capacitance	C_I	-	5.0		pF
Output Lead Capacitance	C_L	-	-	25	pF

NOTE: *Input leakage current excludes pins that are internally pulled "Low" or "High"*

TABLE 49: AC ELECTRICAL CHARACTERISTICS

VDD=3.3V ±5%, T_A=25°C, UNLESS OTHERWISE SPECIFIED					
PARAMETER	SYMBOL	MIN	TYP	MAX	UNITS
MCLKin Clock Duty Cycle		40	-	60	%
MCLKin Clock Tolerance		-	±50	-	ppm

Table 50: Power Consumption

VDD=3.3V ±5%, T_A=25°C, Unless Otherwise Specified								
Mode	Supply Voltage	Impedance	Receiver	Transmitter	Typ	Max	Unit	Test Condition
E1	3.3V	75Ω	1:1	1:2	1.401 1.037	-	W	100% ones 50% ones
E1	3.3V	120Ω	1:1	1:2	1.293 0.977	-	W	100% ones 50% ones
T1	3.3V	100Ω	1:1	1:2	1.455 1.059	-	W	100% ones 50% ones
Note: The typical power consumption of the 1.8V supply represents ~ 36mW of the above listed.								

Table 51: E1 Receiver Electrical Characteristics

(VDD=3.3V±5%, TA=25°C unless otherwise specified)					
Parameter	Min	Typ.	Max	Unit	Test Conditions
Receiver loss of signal:					
Number of consecutive zeros before LOS is set	-	32	-	bit	Cable attenuation @1024KHz ITU-G.775, ETS1 300 233
Input signal level at LOS	13	16	-	dB	
RLOS Clear	12.5	-	-	% ones	
Receiver Sensitivity	9	-	-	dB	With nominal pulse amplitude of 3.0V for 120Ω and 2.37V for 75Ω application.
Interference Margin	-18	-14	-	dB	With 6dB cable loss
Input Impedance	15		-	KΩ	
Jitter Tolerance: 1 Hz 10KHz---100KHz	 37 0.3	 - -	 - -	 UIpp UIpp	 ITU G.823
Recovered Clock Jitter Transfer Corner Frequency Peaking Amplitude	-	20	36 0.5	KHz dB	ITU G.736
Jitter Attenuator Corner Frequency(-3dB curve) JABW=0 JSBW=1	 - -	 10 1.5	 - -	 Hz Hz	ITU G.736
Return Loss: 51KHz --- 102KHz 102KHz --- 2048KHz 2048KHz --- 3072KHz	 12 8 8	 - - -	 - - -	 dB dB dB	ITU G.703

The product (or products) mentioned in this data sheet are no longer being manufactured and may not be ordered (OBS)

TABLE 52: T1 RECEIVER ELECTRICAL CHARACTERISTICS

VDD_{IO} = 3.3V ± 5% , VDD_{CORE} = 1.8V ± 5%, T_A=25°C, UNLESS OTHERWISE SPECIFIED					
PARAMETER	**MIN.**	**TYP.**	**MAX.**	**UNIT**	**TEST CONDITIONS**
Receiver loss of signal:					
Number of consecutive zeros before RLOS is set		175			
Input signal level at RLOS	13	16	-	dB	Cable attenuation @772kHz
RLOS Clear	12.5	-	-	% ones	ITU-G.775, ETSI 300 233
Receiver Sensitivity	9	-	-	dB	With nominal pulse amplitude of 3.0V for 100Ω termination
Interference Margin	-18	-14	-	dB	With 6db of cable loss
Input Impedance	15	-	-	kΩ	
Jitter Tolerance: 1Hz 10kHz - 100kHz	 138 0.4	 - -	 - -	 UIpp	AT&T Pub 62411
Recovered Clock Jitter Transfer Corner Frequency Peaking Amplitude	 - -	 10 	 - 0.1	 KHz dB	TR-TSY-000499
Jitter Attenuator Corner Frequency (-3dB curve)	-	3		Hz	AT&T Pub 62411
Return Loss: 51kHz - 102kHz 102kHz - 2048kHz 2048kHz - 3072kHz	 14 20 16	 - - -	 - - -	 dB dB dB	

The product (or products) mentioned in this data sheet are no longer being manufactured and may not be ordered (OBS)

TABLE 53: E1 TRANSMITTER ELECTRICAL CHARACTERISTICS

VDD=3.3V ±5%, T_A=25°C, UNLESS OTHERWISE SPECIFIED					
PARAMETER	**MIN**	**TYP**	**MAX**	**UNIT**	**TEST CONDITION**
AMI Output Pulse Amplitude 75Ω 120Ω	 2.13 2.70	 2.37 3.00	 2.60 3.30	 V V	1:2 Transformer
Output Pulse Width	224	244	264	ns	
Output Pulse Width Ratio	0.95	-	1.05		ITU-G.703
Output Pulse Amplitude Ratio	0.95	-	1.05		ITU-G.703

Table 53: E1 Transmitter Electrical Characteristics

VDD=3.3V ±5%, T_A=25°C, Unless Otherwise Specified					
Parameter	**Min**	**Typ**	**Max**	**Unit**	**Test Condition**
Jitter Added by the Transmitter Output	-	0.025	0.05	UI_{p-p}	Broad Band with jitter free TCLK applied to the input.
Output Return Loss					
51kHz - 102kHz	15	-	-	dB	ETSI 300 166
102kHz - 2048kHz	9	-	-	dB	
2048kHz - 3072kHz	8	-	-	dB	

Table 54: T1 Transmitter Electrical Characteristics

VDD=3.3V ±5%, T_A=25°C, Unless Otherwise Specified					
Parameter	**Min**	**Typ**	**Max**	**Unit**	**Test Condition**
AMI Output Pulse Amplitude	2.4	3.0	3.6	V	1:2 Transformer measured at DSX-1
Output Pulse Width	338	350	362	ns	ANSI T1.102
Output Pulse Width Imbalance	-	-	20		ANSI T1.102
Output Pulse Amplitude Imbalance	-	-	±200	mV	ANSI T1.102
Jitter Added by the Transmitter Output	-	0.025	0.05	UI_{p-p}	Broad Band with jitter free TCLK applied to the input.
Output Return Loss					
51kHz - 102kHz	17	-	-	dB	
102kHz - 2048kHz	12	-	-	dB	
2048kHz - 3072kHz	10	-	-	dB	

The product (or products) mentioned in this data sheet are no longer being manufactured and may not be ordered (OBS)

MECHANICAL DIMENSIONS

225 Ball Plastic Ball Grid Array (19.0mm X 19.0mm X 1.0mm)

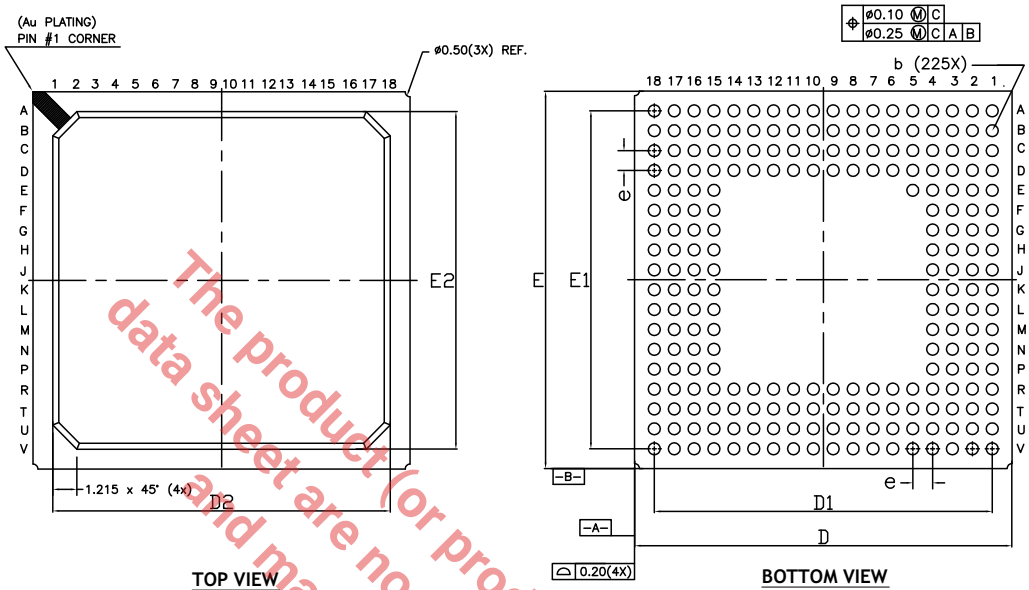

DIM / SYMBOL	MIN	NOM	MAX
A	1.72	1.91	2.10
A1	0.4	0.5	0.6
A2	---	0.56Ref	---
A3	---	0.85Ref	---
D	18.8	19.0	19.2
D1	17.00 BSC		
D2	16.9	17.0	17.1
E	18.8	19.0	19.2
E1	17.00 BSC		
E2	16.9	17.00	17.1
b	0.50	0.60	0.70
e	1.00 BSC		
N	225		

TERMINAL DETAILS

- ALL DIMENSIONS ARE IN MILLIMETERS, ANGLES ARE IN DEGREES.
- DIMENSIONS AND TOLERANCE PER JEDEC MO-318B.

Drawing No.: POD-00000131

Revision: A

The product (or products) mentioned in this data sheet are no longer being manufactured and may not be ordered (OBS)

RECOMMENDED LAND PATTERN AND STENCIL

225 Ball Plastic Ball Grid Array (19.0mm X 19.0mm X 1.0mm)

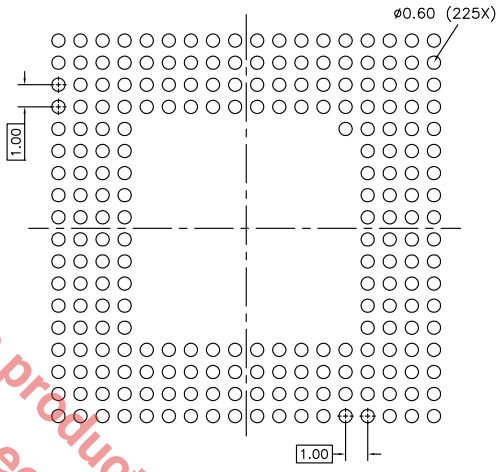

TYPICAL RECOMMENDED LAND PATTERN

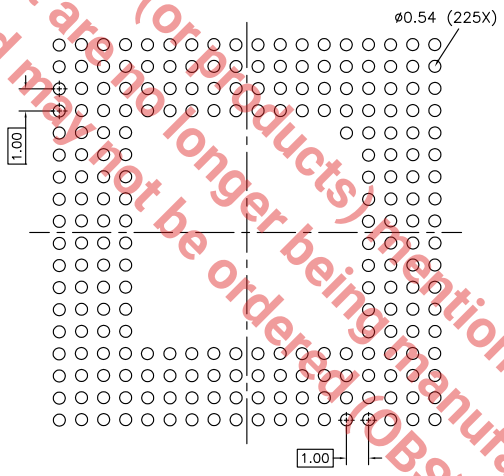

TYPICAL RECOMMENDED STENCIL

Drawing No.: POD-00000131

Revision: A

The product (or products) mentioned in this data sheet are no longer being manufactured and may not be ordered (OBS)

ORDERING INFORMATION[1]

PART NUMBER	OPERATING TEMPERATURE RANGE	LEAD-FREE	PACKAGE	PACKAGING METHOD
XRT83VSH38IB-F	-40°C to +85°C	Yes[2]	225 Ball BGA	Tray

NOTE:

1. *Refer to www.exar.com/XRT83VSH38 for most-up-to-date Ordering Information.*
2. *Visit www.exar.com for additional information on Environmental Rating.*

REVISIONS

REVISION #	DATE	DESCRIPTION
1.0.0	07/14/06	Removed reference to on chip frquency multiplier. Release to production.
1.0.1	07/17/06	Pin number correction, changed SDO pin number from A6 to R7.
1.0.2	08/0306	Added note to figure 32, (For applications without a free running SCLK, a minimum of 1 SCLK pulse must be applied when $\overline{CS}$ is "High", befor $\overline{CS}$ is pulled "Low".
1.0.3	08/10/06	Added timing diagram and timing information for uP Serial Interface
1.0.4	09/06/06	Corrected the Device ID from 0xF5 to 0xF1.
1.0.5	09/08/06	Modified table 22 EQC[4:0] addresses 0xEh to 0x1Ch and 0x0Fh to 0x1Dh.
1.0.6	11/09/06	General edits, changed the Gapped Clock tolerance to 9UI.
1.0.7	03/14/07	Added Max Junct Temp, Theta JA & Theta JC to table 47 (Absokute Maximum Ratings).
1.0.8	08/03/07	Changed the default value of register 0xFE to reflect the correct device ID of 0xF1.
1.0.9	09/24/07	Updated the Power Consumption Numbers.
1.1.0	9/29/10	Updated the Intel Microprocessor Interface Timing Specifications, added pull-up resistors to JTAG pin definitions, corrected Line Code Violation Counter Select definition in reg 0x8Dh
1.2.0	12/11/17	Updated to MaxLinear logo. Updated format and Ordering Information. Figure 12 added.

The product(or Products) mentioned in this data sheet are no longer being manufactured and may not be ordered (OPS)

MAXLINEAR

Corporate Headquarters:
5966 La Place Court
Suite 100
Carlsbad, CA 92008
Tel.:+1 (760) 692-0711
Fax: +1 (760) 444-8598

High Performance Analog:
1060 Rincon Circle
San Jose, CA 95131
Tel.: +1 (669) 265-6100
Fax: +1 (669) 265-6101
Email: commtechsupport@exar.com

www.maxlinear.com www.exar.com

The content of this document is furnished for informational use only, is subject to change without notice, and should not be construed as a commitment by MaxLinear, Inc.. MaxLinear, Inc. assumes no responsibility or liability for any errors or inaccuracies that may appear in the informational content contained in this guide. Complying with all applicable copyright laws is the responsibility of the user. Without limiting the rights under copyright, no part of this document may be reproduced into, stored in, or introduced into a retrieval system, or transmitted in any form or by any means (electronic, mechanical, photocopying, recording, or otherwise), or for any purpose, without the express written permission of MaxLinear, Inc.

Maxlinear, Inc. does not recommend the use of any of its products in life support applications where the failure or malfunction of the product can reasonably be expected to cause failure of the life support system or to significantly affect its safety or effectiveness. Products are not authorized for use in such applications unless MaxLinear, Inc. receives, in writing, assurances to its satisfaction that: (a) the risk of injury or damage has been minimized; (b) the user assumes all such risks; (c) potential liability of MaxLinear, Inc. is adequately protected under the circumstances.

MaxLinear, Inc. may have patents, patent applications, trademarks, copyrights, or other intellectual property rights covering subject matter in this document. Except as expressly provided in any written license agreement from MaxLinear, Inc., the furnishing of this document does not give you any license to these patents, trademarks, copyrights, or other intellectual property.

Company and product names may be registered trademarks or trademarks of the respective owners with which they are associated.

© 2005 - 2017 MaxLinear, Inc. All rights reserved