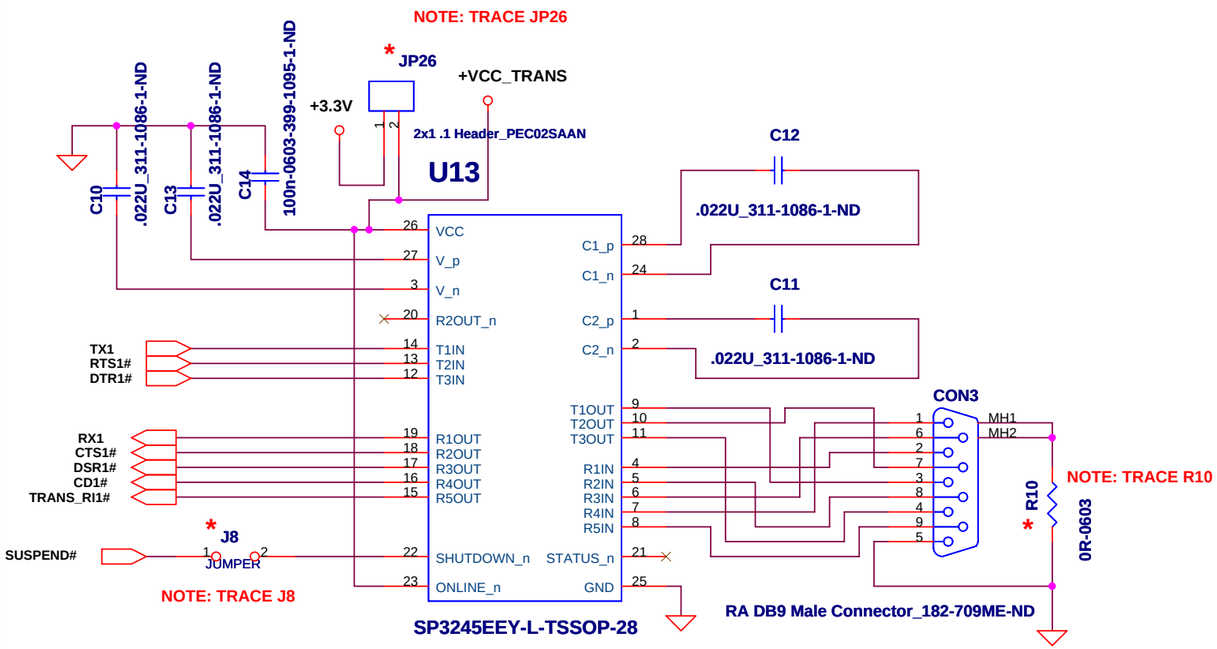


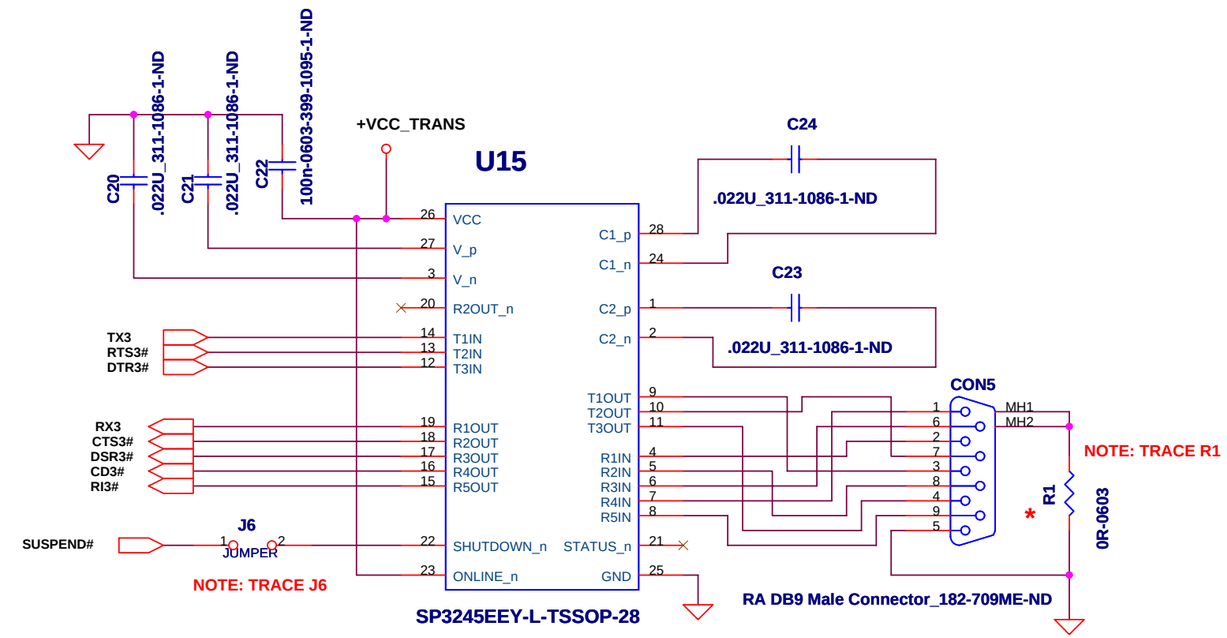


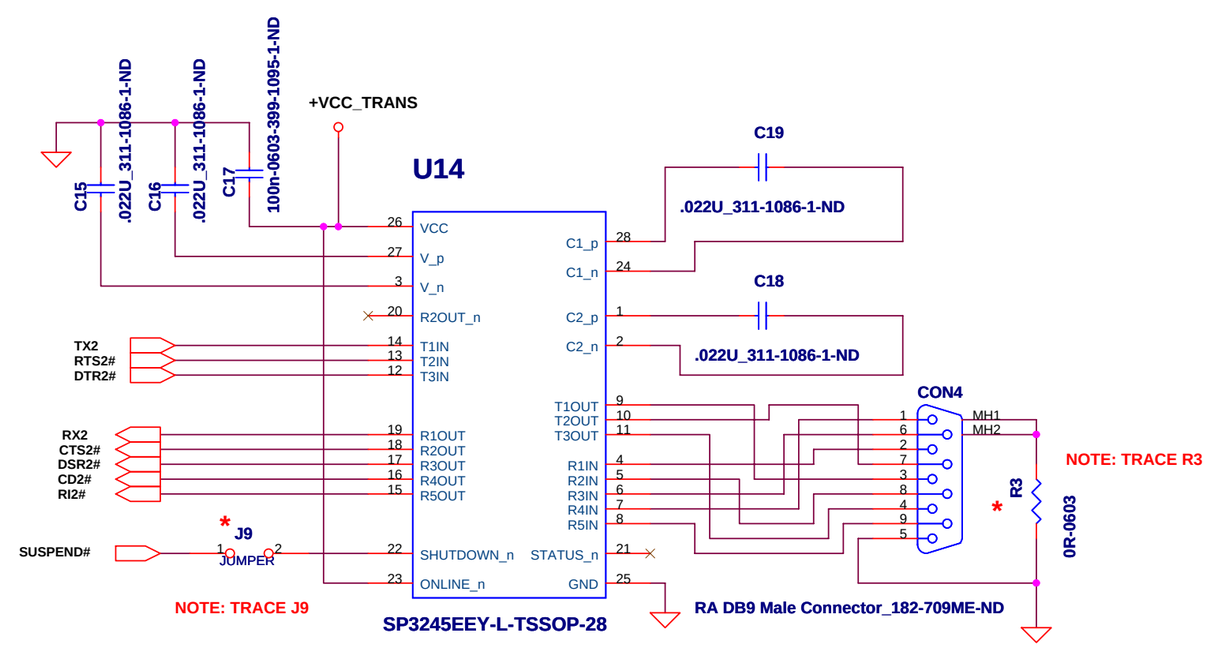


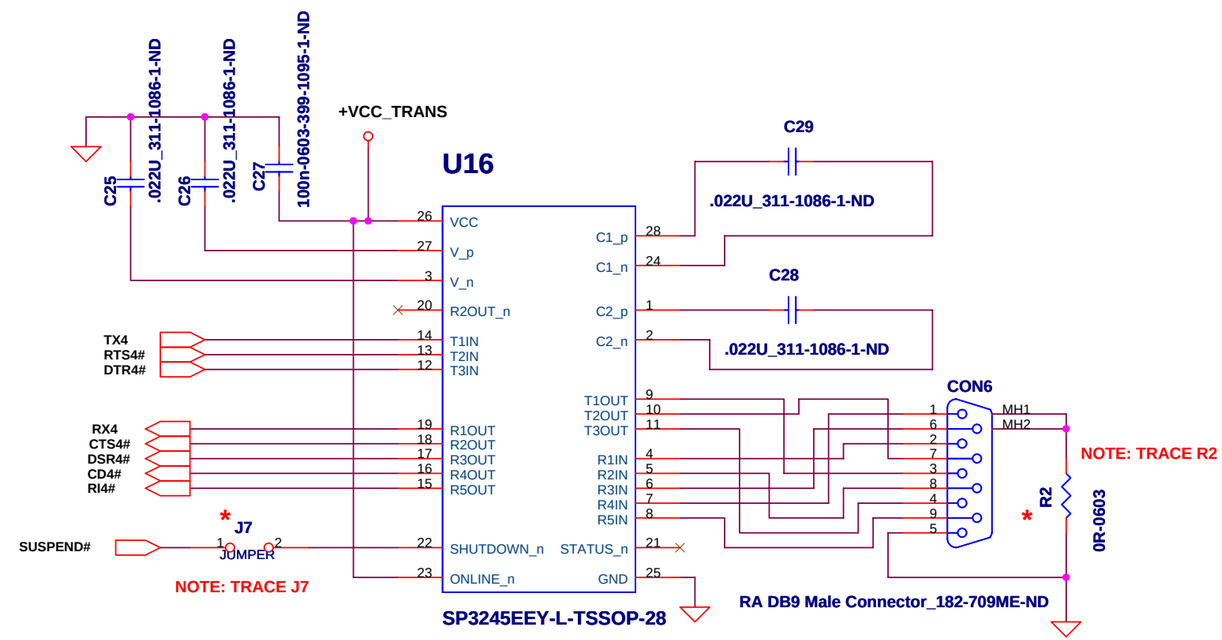


| | | |
|---|---|---|
| Title | USB-UART 4-Channel Evaluation Board | |
| Size: Custom | Document Number: RS-232 INTERFACE | Rev: 1.0 |
| Date: Monday, December 13, 2010 | Sheet 2 of 2 | |

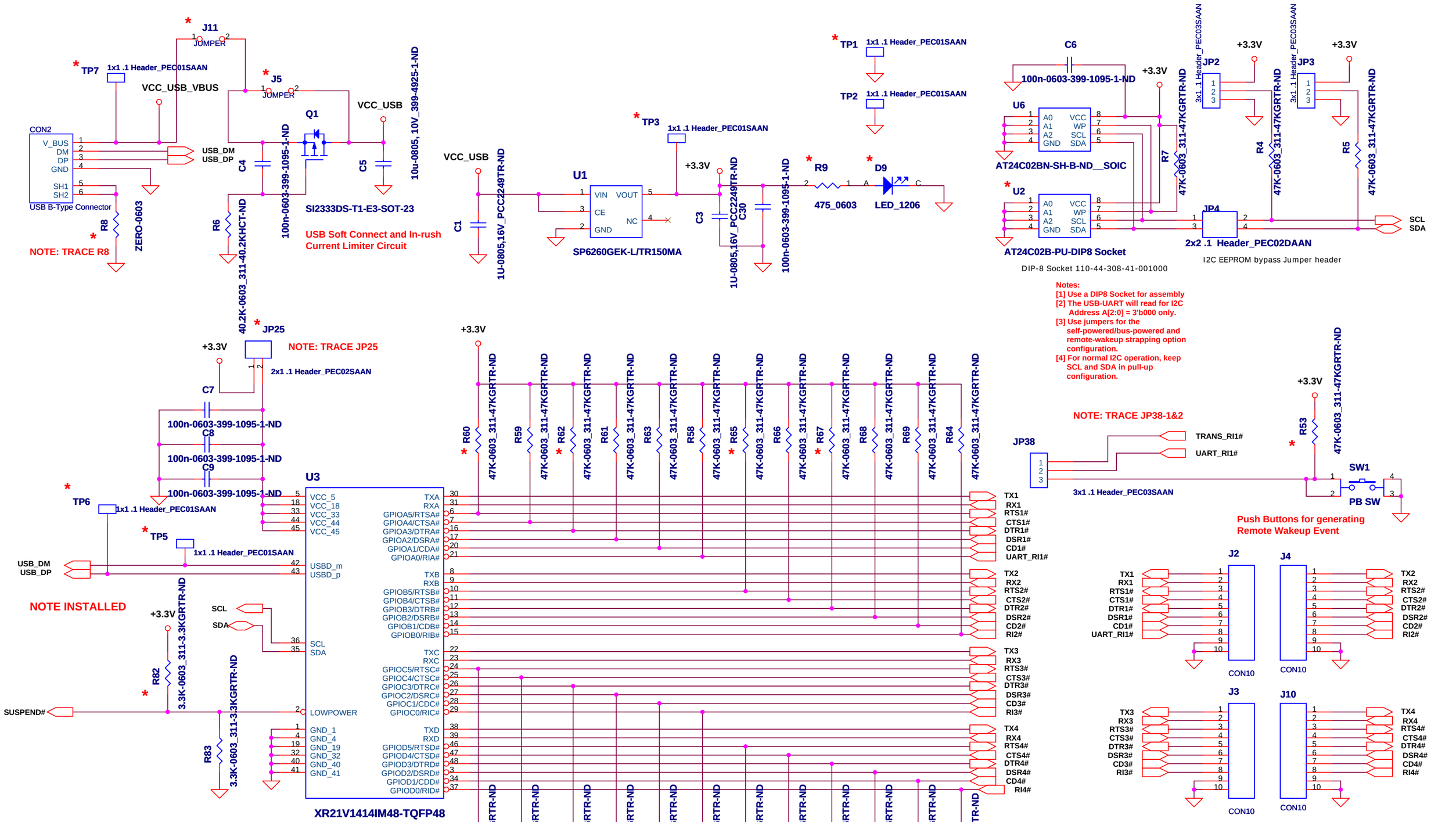
J11
JUMPER
TP7
1x1 .1 Header_PEC01SAAN
VCC_USB_VBUS
J5
JUMPER
Q1
VCC_USB
10u-0805, 10V_399-4925-1-ND
CON2
V_BUS
DM
DP
GND
SH1
SH2
USB B-Type Connector
USB_DM
USB_DP
C4
100n-0603-399-1095-1-ND
C5
R8
ZERO-0603
NOTE: TRACE R8
R6
40.2K-0603_311-40.2KHCT-ND
SI2333DS-T1-E3-SOT-23
USB Soft Connect and In-rush
Current Limiter Circuit
TP3
1x1 .1 Header_PEC01SAAN
VCC_USB
U1
VIN
VOUT
CE
NC
GND
SP6260GEK-L/TR150MA
+3.3V
C1
1U-0805,16V_PCC2249TR-ND
C3
C30
1U-0805,16V_PCC2249TR-ND
100n-0603-399-1095-1-ND
R9
475_0603
D9
LED_1206
TP1
1x1 .1 Header_PEC01SAAN
TP2
1x1 .1 Header_PEC01SAAN
C6
100n-0603-399-1095-1-ND
U6
A0
A1
A2
GND
VCC
WP
SCL
SDA
AT24C02BN-SH-B-ND__SOIC
U2
AT24C02B-PU-DIP8 Socket
DIP-8 Socket 110-44-308-41-001000
R7
47K-0603_311-47KGRTR-ND
JP2
3x1 .1 Header_PEC03SAAN
JP3
3x1 .1 Header_PEC03SAAN
R4
R5
JP4
2x2 .1 Header_PEC02DAAN
SCL
SDA
I2C EEPROM bypass Jumper header
Notes:
[1] Use a DIP8 Socket for assembly
[2] The USB-UART will read for I2C Address A[2:0] = 3'b000 only.
[3] Use jumpers for the self-powered/bus-powered and remote-wakeup strapping option configuration.
[4] For normal I2C operation, keep SCL and SDA in pull-up configuration.
JP25
NOTE: TRACE JP25
2x1 .1 Header_PEC02SAAN
C7
100n-0603-399-1095-1-ND
C8
100n-0603-399-1095-1-ND
C9
100n-0603-399-1095-1-ND
TP6
1x1 .1 Header_PEC01SAAN
TP5
1x1 .1 Header_PEC01SAAN
USB_DM
USB_DP
NOTE INSTALLED
R82
3.3K-0603_311-3.3KGRTR-ND
SUSPEND#
R83
3.3K-0603_311-3.3KGRTR-ND
SCL
SDA
U3
VCC_5
VCC_18
VCC_33
VCC_44
VCC_45
USBD_m
USBD_p
LOWPOWER
GND_1
GND_4
GND_19
GND_32
GND_40
GND_41
TXA
RXA
GPIOA5/RTSA#
GPIOA4/CTSA#
GPIOA3/DTRA#
GPIOA2/DSRA#
GPIOA1/CDA#
GPIOA0/RIA#
TXB
RXB
GPIOB5/RTSB#
GPIOB4/CTSB#
GPIOB3/DTRB#
GPIOB2/DSRB#
GPIOB1/CDB#
GPIOB0/RIB#
TXC
RXC
GPIOC5/RTSC#
GPIOC4/CTSC#
GPIOC3/DTRC#
GPIOC2/DSRC#
GPIOC1/CDC#
GPIOC0/RIC#
TXD
RXD
GPIOD5/RTSD#
GPIOD4/CTSD#
GPIOD3/DTRD#
GPIOD2/DSRD#
GPIOD1/CDD#
GPIOD0/RID#
XR21V1414IM48-TQFP48
R60
R59
R62
R61
R63
R58
R65
R66
R67
R68
R69
R64
TX1
RX1
RTS1#
CTS1#
DTR1#
DSR1#
CD1#
UART_RI1#
TX2
RX2
RTS2#
CTS2#
DTR2#
DSR2#
CD2#
RI2#
TX3
RX3
RTS3#
CTS3#
DTR3#
DSR3#
CD3#
RI3#
TX4
RX4
RTS4#
CTS4#
DTR4#
DSR4#
CD4#
RI4#
R70
R75
R74
R73
R72
R71
R76
R81
R80
R79
R78
R77
NOTE: TRACE JP38-1&2
JP38
TRANS_RI1#
UART_RI1#
3x1 .1 Header_PEC03SAAN
R53
SW1
PB SW
Push Buttons for generating
Remote Wakeup Event
J2
J4
J3
J10
CON10
NOTE: J11 IS SHORTED TO GROUND
NOTE: * NOT INSTALLED
* TP7,J5,J11,TP1,TP3, R9,D9,JP25,TP5,TP6,R82
* R60,R62,R65,R67,R70,R74,R76,R80,U2,R53,
* JP26,R10,R1,R2,R3,R8,J6,J7,J8,J9
Schematic
Title
USB-UART 4-Channel Evaluation Board
Size
Custom
Document Number
Rev
1.0
Date: Monday, December 13, 2010
Sheet 3 of 14