# XR46014

## High Voltage Constant Current Regulator

## Description

The XR46014 is an 80V constant current regulator that can drive upto 250mA. Users may adjust the regulating current from 10mA to 250mA through an external resistor.

A linear type over temperature protection function protects the system by decrease the current linearly when the junction temperature of the chip is higher than 125°C. Multiple XR46014 chips can be connected in parallel to provide higher driving current capability.

The device is available in the SOT-223-3L package.

**FEATURES**

- 3V to 80V operation range
- 270mV low current sense voltage
- Linear over temperature protection
- Can be parallel connected for higher current

**APPLICATIONS**

- LED Lighting Applications
  - Downlight
  - High bay
  - Specialty
  - Architectural

## Typical Application

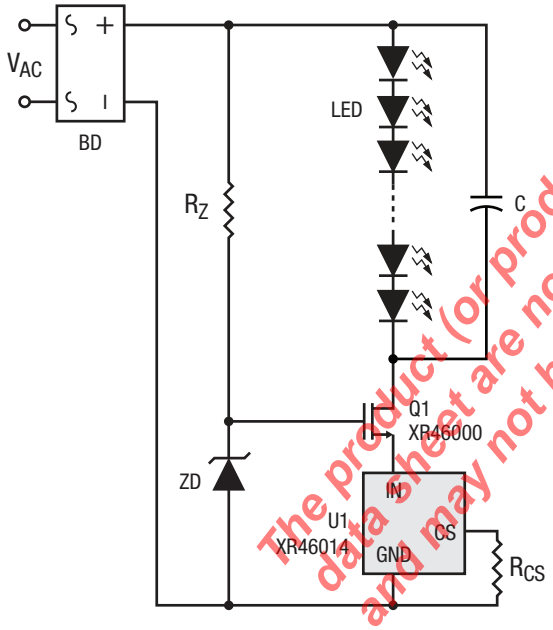


Figure 1. Typical Application

The product (or products) mentioned in this data sheet are no longer being manufactured and may not be ordered (OBS)

## Absolute Maximum Ratings

Stresses beyond the limits listed below may cause permanent damage to the device. Exposure to any Absolute Maximum Rating condition for extended periods may affect device reliability and lifetime.

Sustaining Voltage

IN ..... -0.3V to 88V

CS ..... -0.3V to 7V

Regulating current ..... 300mA

Maximum operating junction temperature, $T_J$..... 165°C

Storage temperature range ..... -55°C to 150°C

Lead temperature (soldering, 10 seconds)..... 260°C

ESD Rating (HBM - Human Body Model)..... 3kV

**NOTE:**

1. All voltages are with respect to Ground. Currents are positive into, negative out of the specified terminal.
2. All parameters having Min/Max specifications are guaranteed. Typical values are for reference purpose only.
3. Unless otherwise noted, all tests are pulsed tests at the specified temperature, therefore: $T_J = T_C = T_A$.

## Operating Conditions

Regulating Current, $I_{IN}$(4) ..... 250mA

Input Voltage, $V_{IN}$(4) ..... 3V to 80V

Maximum Junction Temperature, $T_J$ ..... 150°C

Junction temperature range, $T_J$ ..... -40°C to 125°C

**NOTE:**

4. The maximum regulating current and the input voltage in above are only allowed in the applications which have suitable heat-sink area for the chip in PCB design. The maximum allowable power dissipation of the chip highly depends on the PCB design, PCB material, and ambient temperature. The chip may be damaged if the Junction Temperature is higher than 165°C.

The product (or products) mentioned in this data sheet are no longer being manufactured and may not be ordered (OBS)

## Electrical Characteristics

Unless otherwise noted, typical values are at $T_A$ = 25°C.

| Symbol | Parameter | Conditions | Min | Typ | Max | Units |
|---|---|---|---|---|---|---|
| $V_{CS}$ | CS pin reference voltage | $V_{IN}$ = 5V | 0.26 | 0.27 | 0.28 | V |
| $V_{DROP}$ | Dropout voltage(1) | IN to GND | | 3.2 | 4.5 | V |
| $\Delta V_{LR}/V_{CS}$ | CS pin reference voltage line regulation(2) | $V_{IN}$ = 5V and 40V, $R_{CS}$ = 50Ω | | ±1 | ±2 | % |
| $T_{TP}$ | Thermal protection trip temperature(3)(4) | When $T_J$ is higher than $T_{TP}$, the $V_{CS}$ decreases to $V_{CS,OTP}$ linearly | 110 | 125 | | °C |
| $V_{CS,OTP}$ | Thermal protection mode CS pin reference voltage(3)(4) | $T_J$ = 170°C | | 50 | | % |

**NOTES**

1. Dropout Voltage = $V_{IN}$ at 90% × ($V_{CS}$ at $V_{IN}$ = 5V)
2. The CS Pin Reference Voltage Line Regulation is defined as:

$$\Delta V_{LR}/V_{CS} = \frac{V_{CS(V_{IN}=40V)} - V_{CS(V_{IN}=5V)}}{V_{CS(V_{IN}=5V)}}$$

3. Guarantee by design, not by production test.
4. When $T_J > T_{TP}$, the $V_{CS}$ decreases linearly to around 50% at 170°C.

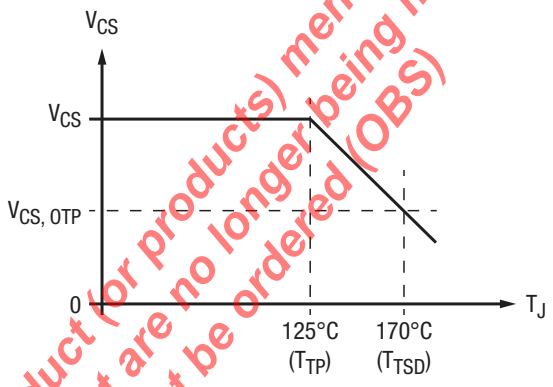


Figure 2. $V_{CS}$ vs. $T_J$

The product (or products) mentioned in this data sheet are no longer being manufactured and may not be ordered (OBS)

## Pin Configuration

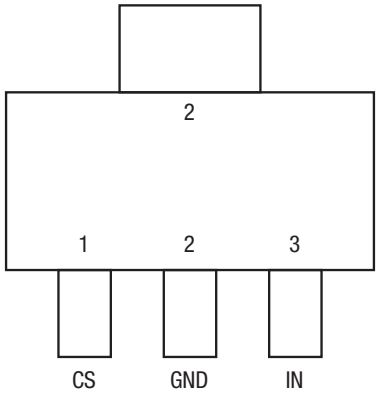


SOT-223, Top View

## Pin Functions

| Pin Number | Pin Name | Description |
|---|---|---|
| 1 | CS | Current sense pin. $I_{IN} = 0.27V/R_{CS}$. |
| 2 | GND | Chip ground pin. |
| 3 | IN | Power source and current input pin. |

The product (or products) mentioned in this data sheet are no longer being manufactured and may not be ordered (OBS)

## Characteristics Curves

Unless otherwise noted, typical values are at $T_A$ = 25°C.

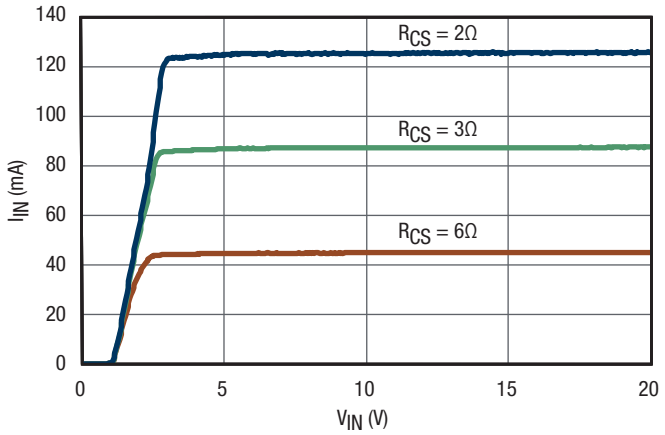


Figure 3. $V_{IN}$ vs. $I_{IN}$

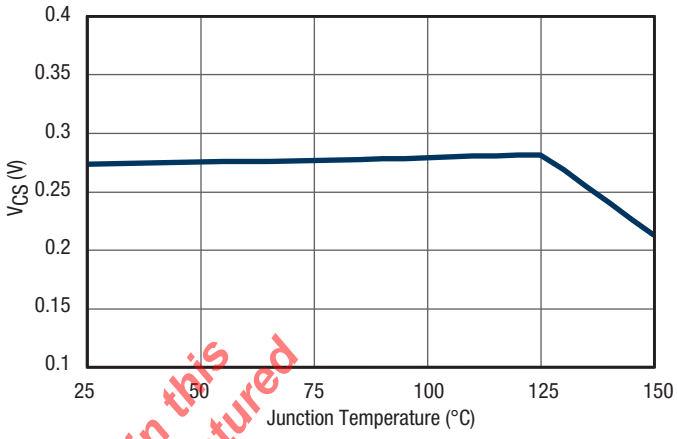


Figure 4. $V_{CS}$ vs. Temperature

The product (or products) mentioned in this data sheet are no longer being manufactured and may not be ordered (OBS)

## Functional Block Diagram

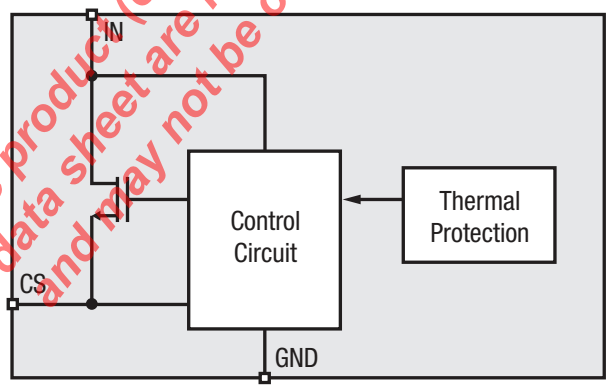


Figure 5. Functional Block Diagram

## Mechanical Dimensions

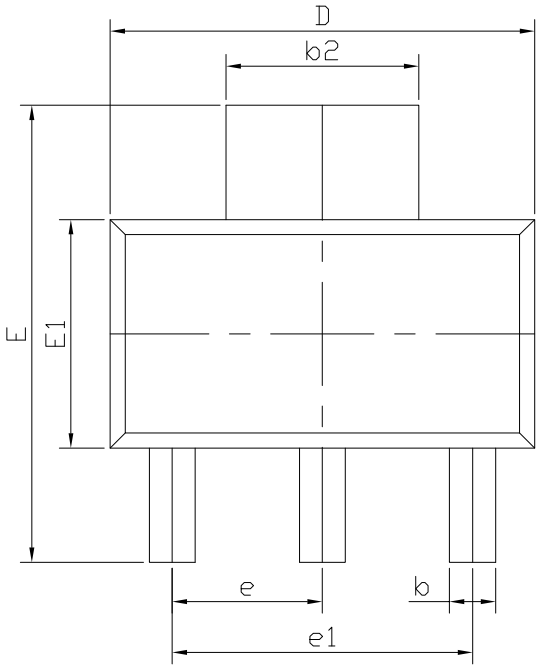


TOP VIEW

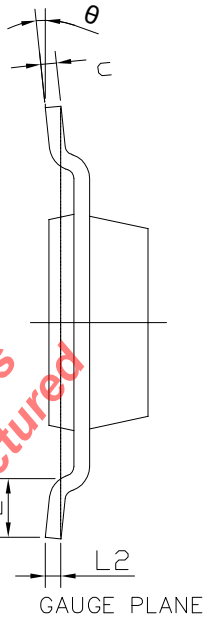


SIDE VIEW 1

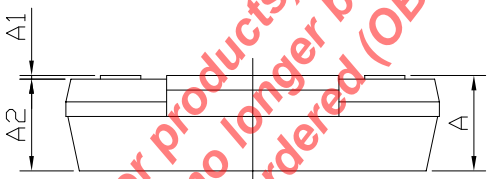


SIDE VIEW 2

The product (or products) mentioned in this data sheet are no longer being manufactured and may not be ordered (OBS)

| SYMBOL \ DIM | MIN. | NOM. | MAX. |
|---|---|---|---|
| A | – | – | 1.80 |
| A1 | 0.02 | – | 0.10 |
| A2 | 1.50 | 1.60 | 1.70 |
| b | 0.66 | 0.76 | 0.84 |
| b2 | 2.90 | 3.00 | 3.10 |
| c | 0.23 | 0.30 | 0.35 |
| D | 6.30 | 6.50 | 6.70 |
| E | 6.70 | 7.00 | 7.30 |
| E1 | 3.30 | 3.50 | 3.70 |
| e | 2.30 BSC | | |
| e1 | 4.60 BSC | | |
| L | 0.75 | – | – |
| L2 | 0.25 BSC | | |
| θ | 0° | – | 10° |
| N | 3 | | |

TERMINAL DETAILS

NOTE : ALL DIMENSIONS ARE IN MILLIMETERS, ANGLES ARE IN DEGREES.

Drawing No.: POD-00000098

Revision: C

## Recommended Land Pattern and Stencil

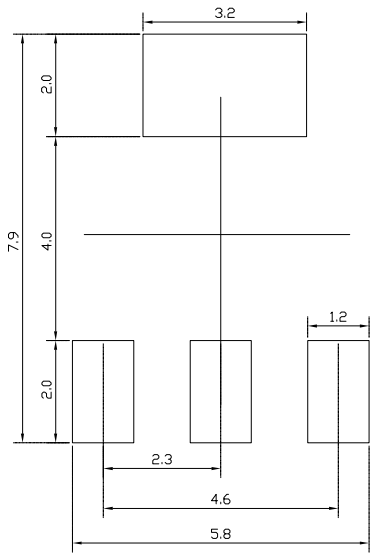


TYPICAL RECOMMENDED LAND PATTERN

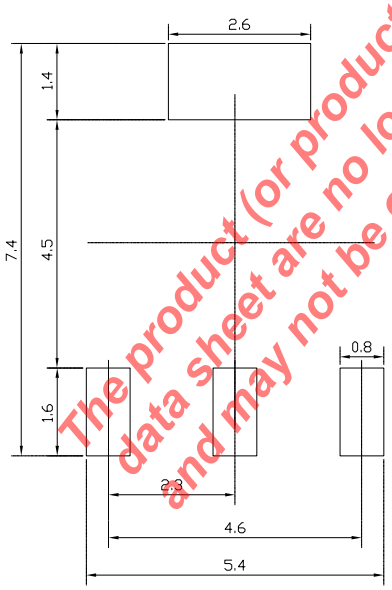


TYPICAL RECOMMENDED STENCIL

NOTE : ALL DIMENSIONS ARE IN MILLIMETERS, ANGLES ARE IN DEGREES.

Drawing No.: POD-00000098

Revision: C

The product (or products) mentioned in this data sheet are no longer being manufactured and may not be ordered (OBS)

## Ordering Information[1]

| Part Number | Operating Temperature Range | Lead-Free | Package | Packaging Method |
|---|---|---|---|---|
| XR46014ISETR | -40°C ≤ $T_J$ ≤ 125°C | Yes[2] | SOT-223 | Tape and Reel |

**NOTE:**
1. Refer to www.exar.com/XR46014 for most up-to-date Ordering Information.
2. Visit www.exar.com for additional information on Environmental Rating.

## Revision History

| Revision | Date | Description |
|---|---|---|
| 1.0 | Jan 2015 | Initial release. |
| 1A | Nov 2016 | New datasheet format, update Typical Application and add package drawing number to Package Description. |
| 1B | Mar 2017 | Add HBM ESD rating and clarify operating temperature range. |
| 1C | May 2018 | Update to MaxLinear logo. Update format and Ordering Information. |

The product (or products) mentioned in this data sheet are no longer being manufactured and may not be ordered (OBS)

**Corporate Headquarters:**
5966 La Place Court
Suite 100
Carlsbad, CA 92008
Tel.:+1 (760) 692-0711
Fax: +1 (760) 444-8598
www.maxlinear.com

**High Performance Analog:**
1060 Rincon Circle
San Jose, CA 95131
Tel.: +1 (669) 265-6100
Fax: +1 (669) 265-6101
www.exar.com

The content of this document is furnished for informational use only, is subject to change without notice, and should not be construed as a commitment by MaxLinear, Inc.. MaxLinear, Inc. assumes no responsibility or liability for any errors or inaccuracies that may appear in the informational content contained in this guide. Complying with all applicable copyright laws is the responsibility of the user. Without limiting the rights under copyright, no part of this document may be reproduced into, stored in, or introduced into a retrieval system, or transmitted in any form or by any means (electronic, mechanical, photocopying, recording, or otherwise), or for any purpose, without the express written permission of MaxLinear, Inc.

Maxlinear, Inc. does not recommend the use of any of its products in life support applications where the failure or malfunction of the product can reasonably be expected to cause failure of the life support system or to significantly affect its safety or effectiveness. Products are not authorized for use in such applications unless MaxLinear, Inc. receives, in writing, assurances to its satisfaction that: (a) the risk of injury or damage has been minimized; (b) the user assumes all such risks; (c) potential liability of MaxLinear, Inc. is adequately protected under the circumstances.

MaxLinear, Inc. may have patents, patent applications, trademarks, copyrights, or other intellectual property rights covering subject matter in this document. Except as expressly provided in any written license agreement from MaxLinear, Inc., the furnishing of this document does not give you any license to these patents, trademarks, copyrights, or other intellectual property.

Company and product names may be registered trademarks or trademarks of the respective owners with which they are associated.

© 2016 - 2018 MaxLinear, Inc. All rights reserved