GENERAL DESCRIPTION

The XRT83L30 is a fully integrated single-channel long-haul and short-haul line interface unit for T1(1.544Mbps) 100Ω, E1(2.048Mbps) 75Ω or 120Ω and J1 110Ω applications.

In long-haul applications the XRT83L30 accepts signals that have passed through cables from 0 feet to over 6000 feet in length and have been attenuated by 0 to 45dB at 772kHz in T1 mode or 0 to 43dB at 1024kHz in E1 mode. In T1 applications, the XRT83L30 can generate five transmit pulse shapes to meet the short-haul Digital Cross-Connect (DSX-1) template requirements as well as for Channel Service Units (CSU) Line Build Out (LBO) filters of 0dB, -7.5dB, -15dB and -22.5dB as required by FCC rules. It also provides programmable transmit pulse generator that can be used for arbitrary output pulse shaping allowing performance improvement over a wide variety of conditions.

The XRT83L30 provides both Serial Host microprocessor interface and Hardware Mode for programming and control. Both B8ZS and HDB3 encoding and decoding functions are included and can be disabled as required. On-chip crystal-less jitter attenuator with a 32 or 64 bit FIFO can be placed either in the receive or the transmit path with loop bandwidths of less than 3Hz. The XRT83L30 provides a variety of loop-back and diagnostic features as well as transmit driver short circuit detection and receive loss of signal monitoring. It supports internal impedance matching for 75Ω, 100Ω, 110Ω and 120Ω for both transmitter and receiver. For the receiver this is accomplished by internal resistors or through the combination of one single fixed value external resistor and programmable internal resistors. In the absence of the power supply, the transmit output and receive input are tri-stated allowing for redundancy applications. The chip includes an integrated programmable clock multiplier that can synthesize T1 or E1 master clocks from a variety of external clock sources.

APPLICATIONS

- T1 Digital Cross-Connects (DSX-1)
- ISDN Primary Rate Interface
- CSU/DSU E1/T1/J1 Interface
- T1/E1/J1 LAN/WAN Routers
- Public switching Systems and PBX Interfaces
- T1/E1/J1 Multiplexer and Channel Banks

FEATURES

(See Page 2)

This product (or products) mentioned in this data sheet are no longer being manufactured and may not be ordered (OBS)

FIGURE 1. BLOCK DIAGRAM OF THE XRT83L30 T1/E1/J1 LIU (HOST MODE)

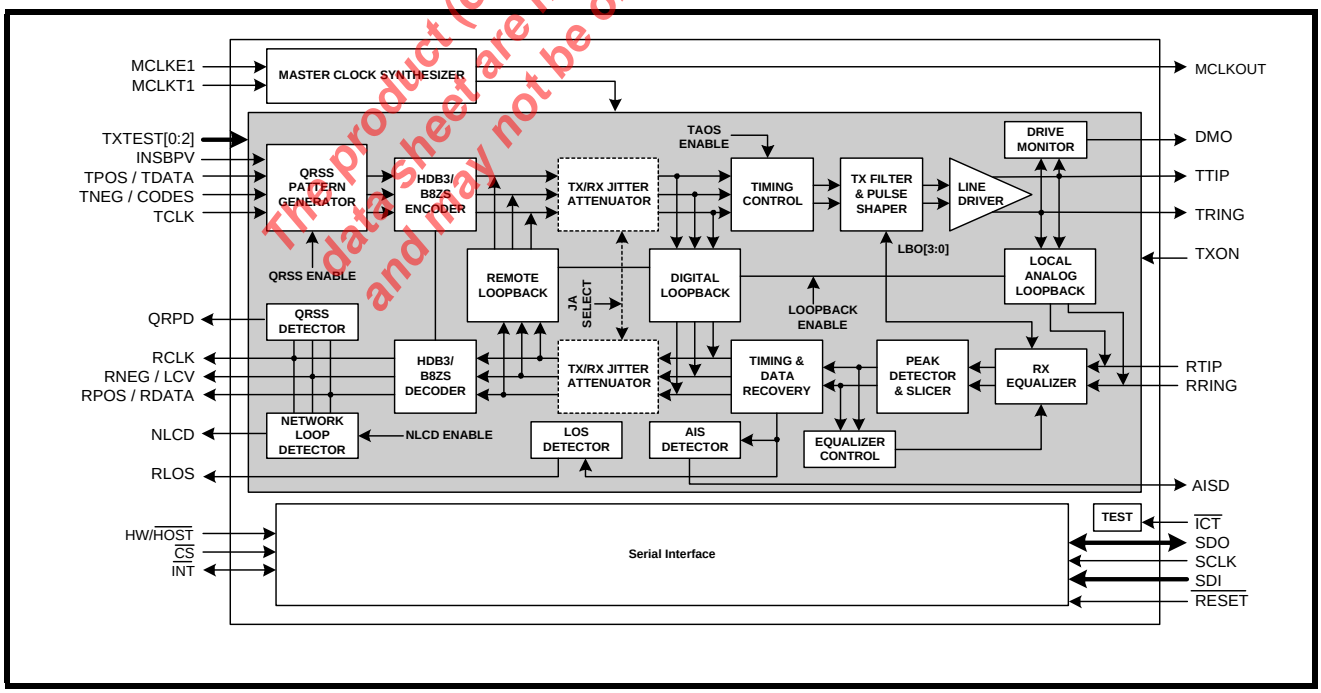

FIGURE 2. BLOCK DIAGRAM OF THE XRT83L30 T1/E1/J1 LIU (HARDWARE MODE)

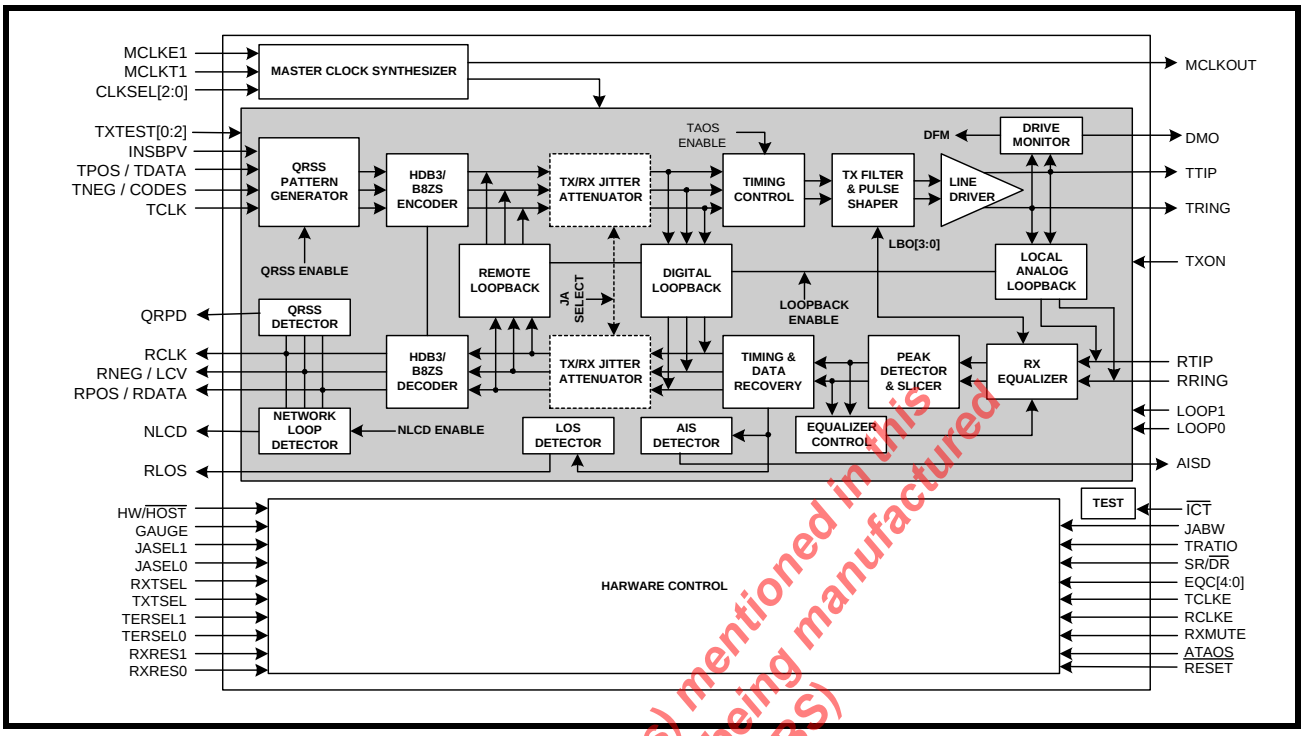

The product (or products) mentioned in this data sheet are no longer being manufactured and may not be ordered (OBS)

FEATURES

- Fully integrated single-channel long-haul and short-haul transceiver for E1,T1 or J1 applications.
- Adaptive Receive Equalizer for cable attenuation of up to 45dB for T1 and 43dB for E1.
- Programmable Transmit Pulse Shaper for E1,T1 or J1 short-haul interfaces.
- Five fixed transmit pulse settings for T1 short-haul applications plus a fully programmable waveform generator for transmit output pulse shaping.
- Programmable Transmit Line Build-Outs (LBO) for T1 long-haul application from 0dB to -22.5dB in three 7.5dB steps.
- Tri-State transmit output and receive input capability for redundancy applications
- Selectable receiver sensitivity from 0 to 36dB or 0 to 45dB cable loss for T1 @772kHz and 0 to 43dB for E1 @1024kHz.
- High receiver interference immunity
- Receive monitor mode handles 0 to 29dB resistive attenuation along with 0 to 6dB of cable attenuation for both T1 and E1 modes.
- Supports 75Ω and 120Ω (E1), 100Ω (T1) and 110Ω (J1) applications.
- Internal and external impedance matching for 75Ω,100Ω, 110Ω and 120Ω.
- Transmit return loss meets or exceeds ETSI 300 166 standard
- On-chip digital clock recovery circuit for high input jitter tolerance
- Crystal-less digital jitter attenuator with 32-bit or 64-bit FIFO Selectable either in transmit or receive path
- On-chip frequency multiplier generates T1 or E1 Master clocks from variety of external clock sources
- On-chip transmit short-circuit protection and limiting, and driver fail monitor output (DMO)

- Receive loss of signal (RLOS) output
- On-chip HDB3/B8ZS/AMI encoder/decoder
- QRSS pattern generation and detection for testing and monitoring
- Error and Bipolar Violation Insertion and Detection
- Receiver Line Attenuation Indication Output in 1dB steps
- Network Loop-Code Detection for automatic Loop-Back Activation/Deactivation
- Transmit All Ones (TAOS) and In-Band Network Loop Up and Down code generators
- Supports Analog, Remote, Digital and Dual Loop-Back Modes
- Meets or exceeds T1 and E1 short-haul and long-haul network access specifications in ITU G.703, G.775, G.736 and G.823; TR-TSY-000499; ANSI T1.403 and T1.408; ETSI 300-166 and AT&T Pub 62411
- Supports both Hardware and serial Microprocessor interface for programming
- Programmable Interrupt
- Low power dissipation
- Logic inputs accept either 3.3V or 5V levels
- Single +3.3V Supply Operation
- 64 pin TQFP package
- -40°C to +85°C Temperature Range

The product (or products) mentioned in this data sheet are no longer being manufactured and may not be ordered (OBS)

ORDERING INFORMATION

PART NUMBER	PACKAGE	OPERATING TEMPERATURE RANGE
XRT83L30IV	64 Lead TQFP (10 x 10 x 1.4mm)	-40°C to +85°C

FIGURE 3. PIN OUT OF THE XRT83L30

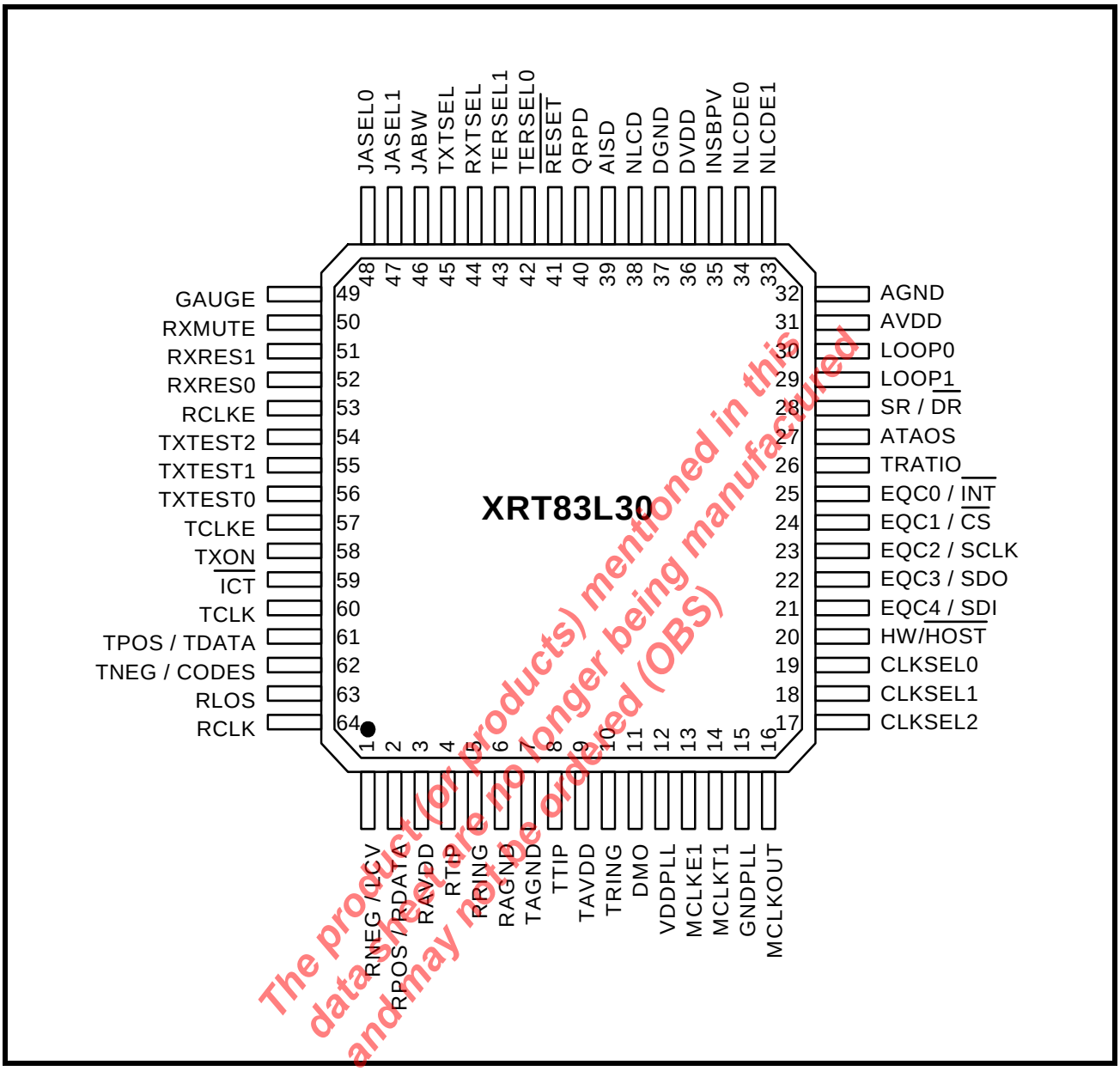

The product (or products) mentioned in this datasheet are no longer being manufactured and may not be ordered (OBS)

TABLE OF CONTENTS

GENERAL DESCRIPTION 1
APPLICATIONS 1
FEATURES 1
Figure 1. Block Diagram of the XRT83L30 T1/E1/J1 LIU (Host Mode) 1
Figure 2. Block Diagram of the XRT83L30 T1/E1/J1 LIU (Hardware Mode) 2
FEATURES 2
ORDERING INFORMATION 3
Figure 3. Pin Out of the XRT83L30 4
TABLE OF CONTENTS I
PIN DESCRIPTIONS BY FUNCTION 5
SERIAL INTERFACE 5
RECEIVER 6
TRANSMITTER 7
JITTER ATTENUATOR 9
CLOCK SYNTHESIZER 9
REDUNDANCY SUPPORT 11
TERMINATIONS 11
CONTROL FUNCTION 13
ALARM FUNCTION/OTHER 14
POWER AND GROUND 16
FUNCTIONAL DESCRIPTION 17
MASTER CLOCK GENERATOR 17
Figure 4. Two Input Clock Source 17
Figure 5. One Input Clock Source 17
TABLE 1: MASTER CLOCK GENERATOR 18
RECEIVER 18
RECEIVER INPUT 18
RECEIVE MONITOR MODE 19
RECEIVER LOSS OF SIGNAL (RLOS) 19
Figure 6. Simplified Diagram of -15dB T1/E1 Short Haul Mode and RLOS Condition 19
Figure 7. Simplified Diagram of -29dB T1/E1 Gain Mode and RLOS Condition 20
Figure 8. Simplified Diagram of -36dB T1/E1 Long Haul Mode and RLOS Condition 20
Figure 9. Simplified Diagram of Extended RLOS mode (E1 Only) 21
RECEIVE HDB3/B8ZS DECODER 21
RECOVERED CLOCK (RCLK) SAMPLING EDGE 21
Figure 10. Receive Clock and Output Data Timing 21
JITTER ATTENUATOR 22
GAPPED CLOCK (JA MUST BE ENABLED IN THE TRANSMIT PATH) 22
TABLE 2: MAXIMUM GAP WIDTH FOR MULTIPLEXER/MAPPER APPLICATIONS 22
ARBITRARY PULSE GENERATOR 23
Figure 11. Arbitrary Pulse Segment Assignment 23
TRANSMITTER 23
DIGITAL DATA FORMAT 23
TRANSMIT CLOCK (TCLK) SAMPLING EDGE 23
Figure 12. Transmit Clock and Input Data Timing 24
TRANSMIT HDB3/B8ZS ENCODER 24
TABLE 3: EXAMPLES OF HDB3 ENCODING 24
TABLE 4: EXAMPLES OF B8ZS ENCODING 24
DRIVER FAILURE MONITOR (DMO) 24
TRANSMIT PULSE SHAPER & LINE BUILD OUT (LBO) CIRCUIT 25
TABLE 5: RECEIVE EQUALIZER CONTROL AND TRANSMIT LINE BUILD-OUT SETTINGS 25
TRANSMIT AND RECEIVE TERMINATIONS 27

This product (or products) mentioned in this data sheet are no longer being manufactured and may not be ordered (OBS)

RECEIVER 27
Internal Receive Termination Mode 27
TABLE 6: RECEIVE TERMINATION CONTROL 27
Figure 13. Simplified Diagram for the Internal Receive and Transmit Termination Mode 27
TABLE 7: RECEIVE TERMINATIONS 28
Figure 14. Simplified Diagram for T1 in the External Termination Mode (RXTSEL= 0) 28
Figure 15. Simplified Diagram for E1 in External Termination Mode (RXTSEL= 0) 29
TRANSMITTER 29
Transmit Termination Mode 29
TABLE 8: TRANSMIT TERMINATION CONTROL 29
TABLE 9: TERMINATION SELECT CONTROL 29
External Transmit Termination Mode 29
TABLE 10: TRANSMIT TERMINATION CONTROL 30
TABLE 11: TRANSMIT TERMINATIONS 30
REDUNDANCY APPLICATIONS 30
TYPICAL REDUNDANCY SCHEMES 31
Figure 16. Simplified Block Diagram of the Transmit Section for 1:1 & 1+1 Redundancy 32
Figure 17. Simplified Block Diagram - Receive Section for 1:1 and 1+1 Redundancy 32
Figure 18. Simplified Block Diagram - Transmit Section for N+1 Redundancy 33
Figure 19. Simplified Block Diagram - Receive Section for N+1 Redundancy 34
PATTERN TRANSMIT AND DETECT FUNCTION 35
TABLE 12: PATTERN TRANSMISSION CONTROL 35
TRANSMIT ALL ONES (TAOS) 35
NETWORK LOOP CODE DETECTION AND TRANSMISSION 35
TABLE 13: LOOP-CODE DETECTION CONTROL 36
TRANSMIT AND DETECT QUASI-RANDOM SIGNAL SOURCE (TDQRSS) 36
LOOP-BACK MODES 38
TABLE 14: LOOP-BACK CONTROL IN HARDWARE MODE 38
TABLE 15: LOOP-BACK CONTROL IN HOST MODE 38
LOCAL ANALOG LOOP-BACK (ALOOP) 38
Figure 20. Local Analog Loop-back signal flow 38
REMOTE LOOP-BACK (RLOOP) 39
Figure 21. Remote Loop-back mode with jitter attenuator selected in receive path 39
Figure 22. Remote Loop-back mode with jitter attenuator selected in Transmit path 39
DIGITAL LOOP-BACK (DLOOP) 40
Figure 23. Digital Loop-back mode with jitter attenuator selected in Transmit path 40
DUAL LOOP-BACK 40
Figure 24. Signal flow in Dual loop-back mode 40
HOST MODE SERIAL INTERFACE OPERATION 41
USING THE MICROPROCESSOR SERIAL INTERFACE 41
Figure 25. Microprocessor Serial Interface Data Structure 42
TABLE 16: MICROPROCESSOR REGISTER ADDRESS 43
TABLE 17: MICROPROCESSOR REGISTER BIT MAP 43
TABLE 18: MICROPROCESSOR REGISTER #0 BIT DESCRIPTION 45
TABLE 19: MICROPROCESSOR REGISTER #1 BIT DESCRIPTION 46
TABLE 20: MICROPROCESSOR REGISTER #2 BIT DESCRIPTION 48
TABLE 21: MICROPROCESSOR REGISTER #3 BIT DESCRIPTION 50
TABLE 22: MICROPROCESSOR REGISTER #4 BIT DESCRIPTION 52
TABLE 23: MICROPROCESSOR REGISTER #5 BIT DESCRIPTION 53
TABLE 24: MICROPROCESSOR REGISTER #6 BIT DESCRIPTION 55
TABLE 25: MICROPROCESSOR REGISTER #7 BIT DESCRIPTION 56
TABLE 26: MICROPROCESSOR REGISTER #8 BIT DESCRIPTION 56
TABLE 27: MICROPROCESSOR REGISTER #9 BIT DESCRIPTION 57
TABLE 28: MICROPROCESSOR REGISTER #10 BIT DESCRIPTION 57
TABLE 29: MICROPROCESSOR REGISTER #11 BIT DESCRIPTION 58

The product(s) mentioned in this data sheet are no longer being manufactured and may not be ordered (ODS)

TABLE 30: MICROPROCESSOR REGISTER #12 BIT DESCRIPTION *58*
TABLE 31: MICROPROCESSOR REGISTER #13 BIT DESCRIPTION *59*
TABLE 32: MICROPROCESSOR REGISTER #14 BIT DESCRIPTION *59*
TABLE 33: MICROPROCESSOR REGISTER #15 BIT DESCRIPTION *60*
TABLE 34: MICROPROCESSOR REGISTER #16 BIT DESCRIPTION *61*
TABLE 35: MICROPROCESSOR REGISTER #17 BIT DESCRIPTION *62*
TABLE 36: MICROPROCESSOR REGISTER #18 BIT DESCRIPTION *63*
ELECTRICAL CHARACTERISTICS 65
TABLE 37: ABSOLUTE MAXIMUM RATINGS *65*
TABLE 38: DC DIGITAL INPUT AND OUTPUT ELECTRICAL CHARACTERISTICS *65*
TABLE 39: XRT83L30 POWER CONSUMPTION *65*
TABLE 40: E1 RECEIVER ELECTRICAL CHARACTERISTICS *66*
TABLE 41: T1 RECEIVER ELECTRICAL CHARACTERISTICS *67*
TABLE 42: E1 TRANSMIT RETURN LOSS REQUIREMENT *67*
TABLE 43: E1 TRANSMITTER ELECTRICAL CHARACTERISTICS *68*
TABLE 44: T1 TRANSMITTER ELECTRICAL CHARACTERISTICS *68*
Figure 26. ITU G.703 Pulse Template *69*
TABLE 45: TRANSMIT PULSE MASK SPECIFICATION *69*
Figure 27. DSX-1 Pulse Template (normalized amplitude) *70*
TABLE 46: DSX1 INTERFACE ISOLATED PULSE MASK AND CORNER POINTS *70*
TABLE 47: AC ELECTRICAL CHARACTERISTICS *71*
Figure 28. Transmit Clock and Input Data Timing *71*
Figure 29. Receive Clock and Output Data Timing *72*
PACKAGE DIMENSIONS **73**
64 LEAD THIN QUAD FLAT PACK 73
(10 X 10 X 1.4 MM TQFP) 73
REV. 3.00 73
ORDERING INFORMATION **74**
TABLE 48. ..... *74*
REVISION HISTORY 74
NOTES **75**

The product (or products) mentioned in this data sheet are no longer being manufactured and may not be ordered (OBS)

PIN DESCRIPTIONS BY FUNCTION

SERIAL INTERFACE

SIGNAL NAME	PIN #	TYPE	DESCRIPTION
HW/$\overline{\text{HOST}}$	20	**I**	**Mode Control Input** This pin is used for selecting **Hardware** or **Host** mode to control the device. Leave this pin unconnected or tie "High" to select **Hardware** mode. For **Host** mode, this pin must be tied "Low". ***NOTE:*** *Internally pulled "High" with a 50kΩ resistor.*
SDI **EQC4**	21	**I**	**Serial Data Input** In **Host** mode, this pin is the data input for the Serial Interface. **Equalizer Control Input 4** **Hardware** mode, **SEE"CONTROL FUNCTION" ON PAGE 13.**
SDO **EQC3**	22	**O** **I**	**Serial Data Output** In **Host** mode, this pin is the output "Read" data for the serial interface. **Equalizer Control Input 3** **Hardware** mode, **SEE"CONTROL FUNCTION" ON PAGE 13.**
SCLK **EQC2**	23	**I**	**Serial Interface Clock Input** In **Host** mode, this clock signal is used to control data "Read" or "Write" operation for the Serial Interface. Maximum clock frequency is 20MHz. **Equalizer Control Input 2** **Hardware** mode, **SEE"CONTROL FUNCTION" ON PAGE 13.**
$\overline{\text{CS}}$ **EQC1**	24	**I**	**Chip Select Input** In **Host** mode, tie this pin "Low" to enable communication with the device via the Serial Interface. **Equalizer Control Input 1** **Hardware** mode, **SEE"CONTROL FUNCTION" ON PAGE 13.**
$\overline{\text{INT}}$ **EQC0**	25	**O** **I**	**Interrupt Output (active "Low")** In **Host** mode, this pin goes "Low" to indicate an alarm condition has occurred within the device. Interrupt generation can be globally disabled by setting the GIE bit to "0" in the command control register. **Equalizer Control Input 0** **Hardware** mode, **SEE"CONTROL FUNCTION" ON PAGE 13.** ***NOTE:*** *This pin is an open drain output and requires an external 10kΩ pull-up resistor.*

The product (or product(s) mentioned in this data sheet are no longer being manufactured and may not be ordered (OBS)

RECEIVER

SIGNAL NAME	PIN #	TYPE	DESCRIPTION
RLOS	63	**O**	**Receiver Loss of Signal** This signal is asserted 'High' for at least one RCLK cycle to indicate loss of signal at the receive input.
RCLK	64	**O**	**Receiver Clock Output**
RNEG **LCV**	1	**O**	**Receiver Negative Data Output** In dual-rail mode, this signal is the receiver negative-rail output data. **Line Code Violation Output** In single-rail mode, this signal goes 'High' for one RCLK cycle to indicate a code violation is detected in the received data. If AMI coding is selected, every bipolar violation received will cause this pin to go "High".
RPOS **RDATA**	2	**O**	**Receiver Positive Data Output** In dual-rail mode, this signal is the receive positive-rail output data sent to the Framer. **Receiver NRZ Data Output** In single-rail mode, this signal is the receive NRZ format output data sent to the Framer.
RTIP	4	**I**	**Receiver Differential Tip Positive Input** Positive differential receive input from the line.
RRING	5	**I**	**Receiver Differential Ring Negative Input** Negative differential receive input from the line.
RXMUTE	50	**I**	**Receive Muting** In **Hardware** mode, connect this pin 'High' to mute RPOS and RNEG outputs to a "Low" state upon receipt of LOS condition to prevent data chattering. Connect this pin to 'Low' to disable muting function. ***NOTE:*** *Internally pulled "Low" with 50kΩ resistor.*
RCLKE	53	**I**	**Receive Clock Edge** In **Hardware** mode, with this pin set to 'High' the output receive data is updated on the falling edge of RCLK. With this pin tied 'Low', output data is updated on the rising edge of RCLK. ***NOTE:*** *Internally pulled "Low" with a 50kΩ resistor.*

The product (or products) mentioned in this data sheet are no longer being manufactured and may not be ordered (OBS)

TRANSMITTER

SIGNAL NAME	PIN #	TYPE	DESCRIPTION
TTIP	8	**O**	**Transmitter Tip Output** Positive differential transmit output to the line.
TRING	10	**O**	**Transmitter Ring Output** Negative differential transmit output to the line.
TPOS **TDATA**	61	**I**	**Transmitter Positive Data Input** In dual-rail mode, this signal is the positive-rail input data for the transmitter. **Transmitter Data Input** In single-rail mode, this pin is used as the NRZ input data for the transmitter. ***NOTE:*** *Internally pulled "Low" with a 50kΩ resistor.*
TNEG **CODES**	62	**I**	**Transmitter Negative NRZ Data Input** In dual-rail mode, this signal is the negative-rail input data for the transmitter. In single-rail mode, this pin can be left unconnected. **Coding Select** In **Hardware** mode and with single-rail mode selected, connecting this pin "Low" enables HDB3 in E1 or B8ZS in T1 encoding and decoding. Connecting this pin "High" selects AMI data format. ***NOTE:*** *Internally pulled "Low" with a 50kΩ resistor.*
TCLK	60	**I**	**Transmitter Clock Input** E1 rate at 2.048MHz ± 50ppm T1 rate at 1.544MHz ± 32ppm During normal operation, both in **Host** mode and **Hardware** mode, TCLK is used for sampling input data at TPOS/TDATA and TNEG/CODES while MCLK is used as the timing reference for the transmit pulse shaping circuit.
TCLKE	57	**I**	**Transmit Clock Edge** In **Hardware** mode, with this pin set to a "High", transmit input data is sampled at the rising edge of TCLK. With this pin tied "Low", input data are sampled at the falling edge of TCLK. ***NOTE:*** *Internally pulled "Low" with a 50kΩ resistor.*
TXON	58	**I**	**Transmitter Turn On** In **Hardware** mode, setting this pin "High" turns on the Transmit Section. In this mode, when TXON = "0", TTIP and TRING driver outputs will be tri-stated. ***NOTES:*** 1. *Internally pulled "Low" with a 50kΩ resistor.* 2. *In **Hardware** mode only, the receiver is turned on at power-up.*

The product (or products) mentioned in this data sheet are no longer being manufactured and may not be ordered (OBS)

TRANSMITTER

SIGNAL NAME	PIN #	TYPE	DESCRIPTION
TXTEST2 **TXTEST1** **TXTEST0**	54 55 56	**I**	**Transmit Test Pattern pin 2** **Transmit Test Pattern pin 1** **Transmit Test Pattern pin 0** TXTEST[2:0] pins are used to generate and transmit test patterns according to the following table:

TXTEST2	TXTEST1	TXTEST0	Test Pattern
0	0	0	Transmit Data
0	0	1	TAOS
0	1	0	TLUC
0	1	1	TLDC
1	0	0	TDQRSS
1	0	1	TDQRSS & INVQRSS
1	1	0	TDQRSS & INSBER
1	1	1	TDQRSS & INVQRSS & INS

TAOS (Transmit All Ones): Activating this condition enables the transmission of an All Ones Pattern.TCLK must not be tied "Low".

TLUC (Transmit Network Loop-Up Code): Activating this condition enables the Network Loop-Up Code of "00001" to be transmitted to the line. When Network Loop-Up code is being transmitted, the XRT83L30 will ignore the Automatic Loop-Code detection and Remote Loop-back activation (NLCDE1="1", NLCDE0="1", if activated) in order to avoid activating Remote Digital Loop-back automatically when the remote terminal responds to the Loop-back request.

TLDC (Transmit Network Loop-Down Code): Activating this condition enables the network Loop-Down Code of "001" to be transmitted to the line.

TDQRSS (Transmit/Detect Quasi-Random Signal): Setting TXTEST2="1", regardless of the state of TXTEST1 and TXTEST0, enables Quasi-Random Signal Source generation and detection. In a T1 system QRSS pattern is a 2^{20}-1 pseudo-random bit sequence (PRBS) with no more than 14 consecutive zeros. In a E1 system, QRSS is a 2^{15}-1 PRBS pattern.

When TXTEST2 is "1" and TDQRSS is active, setting TXTEST0 to "1" inverts the polarity of transmitted QRSS pattern. Resetting to "0" sends the QRSS pattern with no inversion.

When TXTEST2 is "1" and TDQRSS is active, transitions of TXTEST1 from "0" to "1" results in a bit error to be inserted in the transmitted QRSS pattern. The state of this pin is sampled on the rising edge of TCLK. To ensure the insertion of a bit error, this pin should be reset to a "0" before setting to a "1".

When TXTEST2 is "1", TXTEST1 and TXTEST0 affect the transmitted QRSS bit pattern independently.

The product (or products) mentioned in this data sheet are no longer being manufactured and may not be ordered (OBS)

JITTER ATTENUATOR

SIGNAL NAME	PIN #	TYPE	DESCRIPTION
JABW	46	I	**Jitter Attenuator Bandwidth** In **Hardware** and E1 mode, when JABW="0" the jitter attenuator bandwidth is 10Hz (normal mode). Setting JABW to "1" selects a 1.5Hz Bandwidth for the Jitter Attenuator and the FIFO length will be automatically set to 64 bits. In T1 mode the Jitter Attenuator Bandwidth is always set to 3Hz, and the state of this pin has no effect on the Bandwidth. See table under JASEL1 pin, below. ***NOTE:*** *Internally pulled "Low" with a 50kΩ resistor.*
JASEL1 **JASEL0**	47 48	I	**Jitter Attenuator select pin 1** **Jitter Attenuator select pin 0** In **Hardware** mode, JASEL0, JASEL1 and JABW pins are used to place the jitter attenuator in the transmit path, the receive path or to disable it and set the jitter attenuator bandwidth and FIFO size per the following table.

JABW	JASEL1	JASEL0	JA Path	JA BW (Hz)		FIFO Size T1/E1
				T1	E1	
0	0	0	Disabled	------	------	------
0	0	1	Transmit	3	10	32/32
0	1	0	Receive	3	10	32/32
0	1	1	Receive	3	10	64/64
1	0	0	Disabled	------	------	--------
1	0	1	Transmit	3	1.5	32/64
1	1	0	Receive	3	1.5	32/64
1	1	1	Receive	3	1.5	64/64

NOTE: *These pins are internally pulled "Low" with 50kΩ resistors.*

The product (or products) mentioned in this data sheet are no longer being manufactured and may not be ordered (OBS)

CLOCK SYNTHESIZER

SIGNAL NAME	PIN #	TYPE	DESCRIPTION
MCLKE1	13	I	**E1 Master Clock Input** This input signal is an independent 2.048MHz clock for E1 system with required accuracy of better than ±50ppm and a duty cycle of 40% to 60%. MCLKE1 is used in the E1 mode. Its function is to provide internal timing for the PLL clock recovery circuit, transmit pulse shaping, jitter attenuator block, reference clock during transmit all ones data and timing reference for the microprocessor in **Host** mode operation. MCLKE1 is also input to a programmable frequency synthesizer that under the control of the CLKSEL[2:0] inputs can be used to generate a master clock from an accurate external source. In systems that have only one master clock source available (E1 or T1), that clock should be connected to both MCLKE1 and MCLKT1 inputs for proper operation. ***NOTES:*** *1. See pin descriptions for pins CLKSEL[2:0].* *2. Internally pulled "Low" with a 50kΩ resistor.*

CLOCK SYNTHESIZER

SIGNAL NAME	PIN #	TYPE	DESCRIPTION
MCLKT1	14	**I**	**T1 Master Clock Input** This signal is an independent 1.544MHz clock for T1 systems with required accuracy of better than ±50ppm and duty cycle of 40% to 60%. MCLKT1 input is used in the T1 mode. ***NOTES:*** *1. See MCLKE1 description for further explanation for the usage of this pin.* *2. Internally pulled "Low" with a 50kΩ resistor.*
MCLKOUT	16	**O**	**Synthesized Master Clock Output** This signal is the output of the Master Clock Synthesizer PLL which is at T1 or E1 rate based on the mode of operation.
CLKSEL2 **CLKSEL1** **CLKSEL0**	17 18 19	**I**	**Clock Select input for Master Clock Synthesizer pin 2** **Clock Select input for Master Clock Synthesizer pin 1** **Clock Select input for Master Clock Synthesizer pin 0** In **Hardware** mode, CLKSEL[2:0] are input signals to a programmable frequency synthesizer that can be used to generate a master clock from an external accurate clock source according to the following table. The MCLKRATE control signal is generated from the state of EQC[4:0] inputs. See **Table 5** for description of Transmit Equalizer Control bits. In **Host** mode, the state of these pins are ignored and the master frequency PLL is controlled by the corresponding interface bits.

MCLKE1 (kHz)	MCLKT1 (kHz)	CLKSEL2	CLKSEL1	CLKSEL0	MCLKRATE	CLKOUT (KHz)
2048	2048	0	0	0	0	2048
2048	2048	0	0	0	1	1544
2048	1544	0	0	0	0	2048
1544	1544	0	0	1	1	1544
1544	1544	0	0	1	0	2048
2048	1544	0	0	1	1	1544
8	X	0	1	0	0	2048
8	X	0	1	0	1	1544
16	X	0	1	1	0	2048
16	X	0	1	1	1	1544
56	X	1	0	0	0	2048
56	X	1	0	0	1	1544
64	X	1	0	1	0	2048
64	X	1	0	1	1	1544
128	X	1	1	0	0	2048
128	X	1	1	0	1	1544
256	X	1	1	1	0	2048
256	X	1	1	1	1	1544

NOTE: *Internally pulled "Low" with a 50kΩ resistor.*

The product (or products) mentioned in this data sheet are no longer being manufactured and may not be ordered (OBS)

REDUNDANCY SUPPORT

SIGNAL NAME	PIN #	TYPE	DESCRIPTION
DMO	11	**O**	**Driver Failure Monitor** This pin transitions "High" if a short circuit condition is detected in the transmit driver, or no transmit output pulse is detected for more than 128 TCLK cycles.

TERMINATIONS

SIGNAL NAME	PIN #	TYPE	DESCRIPTION
GAUGE	49	**I**	**Twisted Pair Cable Wire Gauge Select** In **Hardware** mode, connect this pin "High" to select 26 Gauge wire. Connect this pin "Low" to select 22 and 24 gauge wire. ***NOTE:*** *Internally pulled "Low" with a 50kΩ resistor.*
TRATIO	26	**I**	**Transmitter Transformer Ratio Select** In external termination mode, setting this pin "High" selects a transformer ratio of 1:2 for the transmitter. A "Low" on this pin sets the transmitter transformer ratio to 1:2.45. In the internal termination mode the transmitter transformer ratio is permanently set to 1:2 and the state of this pin is ignored. ***NOTE:*** *Internally pulled "Low" with a 50kΩ resistor.*
RXTSEL	44	**I**	**Receiver Termination Select** In **Hardware** mode when this pin is "Low" the receive line termination is determined only by the external resistor. When "High", the receive termination is realized by internal resistors or the combination of internal and external resistors according to RXRES[1:0]. These conditions are described in the following table: **RXTSEL** | **RX Termination** **0** | **External** **1** | **Internal** ***NOTE:*** *This pin is internally pulled "Low" with a 50kΩ resistor.*
TXTSEL	45	**I**	**Transmit Termination Select** In **Hardware** mode when this pin is "Low" the transmit line termination is determined only by external resistor. When "High", the transmit termination is realized only by an internal resistor. These conditions are summarized in the following table: **TXTSEL** | **TX Termination** **0** | **External** **1** | **Internal** ***NOTE:*** *This pin is internally pulled "Low" with a 50kΩ resistor.*

The product (or products) mentioned in this data sheet are no longer being manufactured and may not be ordered (OBS)

TERMINATIONS

<table>
<tr><th>SIGNAL NAME</th><th>PIN #</th><th>TYPE</th><th>DESCRIPTION</th></tr>
<tr><td>TERSEL1
TERSEL0</td><td>43
42</td><td>I</td><td>

Termination Impedance Select pin 1
Termination Impedance Select pin 0
In the **Hardware** mode and in the Internal Termination mode (TXTSEL="1" and/or RXTSEL="1") TERSEL[1:0] control the transmit and receive termination impedance according to the following table:

<table>
<tr><th>TERSEL1</th><th>TERSEL0</th><th>Termination</th></tr>
<tr><td>0</td><td>0</td><td>100Ω</td></tr>
<tr><td>0</td><td>1</td><td>110Ω</td></tr>
<tr><td>1</td><td>0</td><td>75 Ω</td></tr>
<tr><td>1</td><td>1</td><td>120Ω</td></tr>
</table>

In the Internal Termination mode, the receive termination is realized completely by internal resistors or the combination of internal and one fixed external resistor (see description for RXRES[1:0] pins). In the internal termination mode the transformer ratio of 1:2 and 2:1 is required for the transmitter and receiver respectively with the transmitter output AC coupled to the transformer.
NOTE: *This pin is internally pulled "Low" with a 50kΩ resistor.*

</td></tr>
<tr><td>RXRES1
RXRES0</td><td>51
52</td><td>I</td><td>

Receive External Resistor Control pin 1
Receive External Resistor Control pin 0
In **Hardware** mode, RXRES[1:0] pins selects the required value of the external fixed resistor for the receiver according to the following table. This mode is only available in the internal impedance mode by pulling RXTSEL "High".

<table>
<tr><th>RXRES1</th><th>RXRES0</th><th>RX Fixed Resistor</th></tr>
<tr><td>0</td><td>0</td><td>No External Fixed Resistor</td></tr>
<tr><td>0</td><td>1</td><td>240Ω</td></tr>
<tr><td>1</td><td>0</td><td>210Ω</td></tr>
<tr><td>1</td><td>1</td><td>150Ω</td></tr>
</table>

NOTE: *Internally pulled "Low" with 50kΩ resistor.*

</td></tr>
</table>

The product (or products) mentioned in this data sheet are no longer being manufactured and may not be ordered (OBS)

CONTROL FUNCTION

$\overline{\text{RESET}}$	41	**I**	**Hardware Reset (Active "Low")** When this pin is tied "Low" for more than 10µs, the device is put in the reset state. Pulling $\overline{\text{RESET}}$ "Low" while the $\overline{\text{ICT}}$ pin is also "Low" will put the chip in factory test mode. This condition should never happen during normal operation. ***NOTE:*** *Internally pulled "High" with a 50kΩ resistor.*
SR/$\overline{\text{DR}}$	28	**I**	**Single-Rail/Dual-Rail Data Format** In **Hardware** mode, connect this pin "Low" to select transmit and receive data format in dual-rail mode. In this mode, HDB3 or B8ZS encoder and decoder are not available. Connect this pin "High" to select single-rail data format. ***NOTE:*** *Internally pulled "Low" with a 50kΩ resistor.*
LOOP1 **LOOP0**	29 30	**I**	**Loop-back Control pin 1** **Loop-back Control pin 0** In **Hardware** mode, LOOP[1:0] pins are used to control the Loop-back functions according to the following table: LOOP1 / LOOP0 / MODE 0 / 0 / Normal Mode 0 / 1 / Local Loop-Back 1 / 0 / Remote Loop-Bac 1 / 1 / Digital Loop-Back ***NOTE:*** *Internally pulled "Low" with a 50kΩ resistor.*
EQC4 **SDI**	21	**I**	**Equalizer Control Input pin 4** In **Hardware** mode, this pin together with EQC[3:0] are used for controlling the transmit pulse shaping, transmit line build-out (LBO), receive monitoring and also to select T1, E1 or J1 modes of operation. See **Table 5** for description of Transmit Equalizer Control bits. **Serial Data Input** **Host** mode, **SEE"SERIAL INTERFACE" ON PAGE 5.**
EQC3 **SDO**	22	**I** **O**	**Equalizer Control Input pin 3** See EQC4/SDI description for further explanation for the usage of this pin. **Serial Data Output** **Host** mode, **SEE"SERIAL INTERFACE" ON PAGE 5.**
EQC2 **SCLK**	23	**I**	**Equalizer Control Input pin 2** See EQC4/SDI description for further explanation for the usage of this pin. **Serial Interface Clock Input** **Host** mode, **SEE"SERIAL INTERFACE" ON PAGE 5.**

The product (or products) mentioned in this data sheet are no longer being manufactured and may not be ordered (OBS)

CONTROL FUNCTION

EQC1 **$\overline{\text{CS}}$**	24	**I**	**Equalizer Control Input pin 1** See EQC4/SDI description for further explanation for the usage of this pin. **Chip Select Input** **Host** mode, **SEE"SERIAL INTERFACE" ON PAGE 5.**
EQC0 **$\overline{\text{INT}}$**	25	**I** **O**	**Equalizer Control Input pin 0** See EQC4/SDI description for further explanation for the usage of this pin. **Interrupt Output** **Host** mode, **SEE"SERIAL INTERFACE" ON PAGE 5.**

ALARM FUNCTION/OTHER

SIGNAL NAME	PIN #	TYPE	DESCRIPTION
ATAOS	27	**I**	**Automatic Transmit "All Ones" Pattern** In **Hardware** mode, a "High" level on this pin enables the automatic transmission of an "All Ones" AMI pattern from the transmitter when the receiver has detected an LOS condition. A "Low" level on this pin disables this function. ***NOTE:*** *This pin is internally pulled "Low" with a 50kΩ resistor.*
$\overline{\text{ICT}}$	59	**I**	**In-Circuit Testing (active "Low")** When this pin is tied "Low", all output pins are forced to a "High" impedance state for in-circuit testing. Pulling $\overline{\text{RESET}}$ "Low" while $\overline{\text{ICT}}$ pin is also "Low" will put the chip in factory test mode. This condition should never happen during normal operation. ***NOTE:*** *Internally pulled "High" with a 50kΩ resistor.*

The product (or product) mentioned in this data sheet are no longer being manufactured and may not be ordered (OBS)

ALARM FUNCTION/OTHER

SIGNAL NAME	PIN #	TYPE	DESCRIPTION
NLCDE1 **NLCDE0**	33 34	I	**Network Loop Code Detection Enable pin 1** **Network Loop Code Detection Enable pin 0** NLCDE[1:0] pins are used to control the Loop-Code detection according to the following table: **NLCDE1 / NLCDE0 / Function** 0 / 0 / Disable Loop-Code Detection 0 / 1 / Detect Loop-Up Code in Receive Data 1 / 0 / Detect Loop-Down Code in Receive Data 1 / 1 / Automatic Loop-Code Detection When NLCDE1="0" and NCLDE0="1", or NLCDE1="1" and NLCDE0="0", the chip is manually programed to monitor the receive data for the Loop-Up or Loop-Down code respectively. When the presence of the "00001" or "001" pattern is detected for more than 5 seconds, the NLCD pin is set to "1" and the host has the option to activate the loop-back function manually. Setting the NLCDE1="1" and NLCDE0="1" enables the Automatic Loop-Code detection and Remote-Loop-Back activation mode. As this mode is initiated, the state of the NLCD pin is reset to "0" and the chip is programmed to monitor the receive data for the Loop-Up Code. If the "00001" pattern is detected for longer than 5 seconds, the NLCD pin is set to "1", Remote Loop-Back is activated and the chip is automatically programed to monitor the receive data for the Loop-Down code. The NLCD pin stays "High" even after the chip stops receiving the Loop-Up code. The remote Loop-Back condition is removed when the chip receives the Loop-Down code for more than 5 seconds or if the Automatic Loop-Code detection mode is terminated.
INSBPV	35	I	**Insert Bipolar Violation** When this pin transitions from "0" to "1", a bipolar violation is inserted in the transmitted data stream. Bipolar violation can be inserted either in the QRSS pattern, or input data when operating in single-rail mode. The state of this pin is sampled on the rising edge of TCLK. ***NOTE:*** *To ensure the insertion of a bipolar violation, this pin should be reset to a "0" prior to setting to a "1".*

The product(s) mentioned in this data sheet are no longer being manufactured and may not be ordered (OBS)

ALARM FUNCTION/OTHER

SIGNAL NAME	PIN #	TYPE	DESCRIPTION
NLCD	38	**O**	**Network Loop-Code Detection Output pin** This pin operates differently in the Manual or the Automatic Network Loop-Code detection modes. In the Manual Loop-Code detection mode (NLCDE1 ="0" and NLCDE0 ="1", or NLCDE1 ="1" and NLCDE0 ="0") this pin gets set to "1" as soon as the Loop-Up ("00001") or Loop-Down ("001") code is detected in the receive data for longer than 5 seconds. The NLCD pin stays in the "1" state for as long as the chip detects the presence of the Loop-Code in the receive data and it is reset to "0" as soon as it stops receiving it. When the Automatic Loop-Code detection mode (NLCDE1 ="1" and NLCDE0 ="1") is initiated, the NLCD output pin is reset to "0" and the chip is programmed to monitor the receive input data for the Loop-Up Code. The NLCD pin is set to a "1" to indicate that the Network Loop Code is detected for more than 5 seconds. Simultaneously the Remote Loop-Back condition is automatically activated and the chip is programmed to monitor the receive data for the Network Loop-Down Code. The NLCD pin stays in the "1" state for as long as the Remote Loop-Back condition is in effect even if the chip stops receiving the Loop-Up Code. Remote Loop-Back is removed if the chip detects the "001" pattern for longer than 5 seconds in the receive data. Detecting the "001" pattern also results in resetting the NLCD output pin.
AISD	39	**O**	**Alarm Indication Signal Detect Output pin** This pin is set to "1" to indicate that an All Ones Signal is detected by the receiver. The value of this pin is based on the current status of Alarm Indication Signal detector.
QRPD	40	**O**	**Quasi-random Pattern Detection Output pin** This pin is set to "1" to indicate that the receiver is currently in synchronization with the QRSS pattern. The value of this pin is based on the current status of Quasi-random pattern detector.

The product (or products) mentioned in this data sheet are no longer being manufactured and may not be ordered (OBS)

POWER AND GROUND

SIGNAL NAME	PIN #	TYPE	DESCRIPTION
TAGND	7	********	**Transmitter Analog Ground**
TAVDD	9	********	**Transmitter Analog Positive Supply (3.3V ± 5%)**
RAGND	6	********	**Receiver Analog Ground**
RAVDD	3	********	**Receiver Analog Positive Supply (3.3V± 5%)**
VDDPLL	12	********	**Analog Positive Supply for Master Clock Synthesizer PLL (3.3V± 5%)**
GNDPLL	15	********	**Analog Ground for Master Clock Synthesizer PLL**
DVDD	36	********	**Digital Positive Supply (3.3V± 5%)**
AVDD	31	********	**Analog Positive Supply (3.3V± 5%)**
DGND	37	********	**Digital Ground**
AGND	32	********	**Analog Ground**

FUNCTIONAL DESCRIPTION

The XRT83L30 is a fully integrated single channel long-haul and short-haul transceiver intended for T1, J1 or E1 systems. Simplified block diagrams of the device are shown in Figure 1, **Host** mode and Figure 2, **Hardware** mode. The XRT83L30 can receive signals that have been attenuated from 0 to 36dB at 772kHz (0 to 6000 feet cable loss) for T1 and from 0 to 43dB at 1024kHz for E1 systems.

In T1 applications, the XRT83L30 can generate five transmit pulse shapes to meet the short-haul Digital Cross-connect (DSX-1) template requirement as well as four CSU Line Build-Out (LBO) filters of 0dB, -7.5dB, -15dB and -22.5dB as required by FCC rules. It also provides programmable transmit output pulse generator that can be used for output pulse shaping allowing performance improvement over a wide variety of conditions. The operation and configuration of the XRT83L30 can be controlled through a serial microprocessor **Host** interface or, by **Hardware** control.

MASTER CLOCK GENERATOR

Using a variety of external clock sources, the on-chip frequency synthesizer generates the T1 (1.544MHz) or E1 (2.048MHz) master clocks necessary for the transmit pulse shaping and receive clock recovery circuit.

There are two master clock inputs MCLKE1 and MCLKT1. In systems where both T1 and E1 master clocks are available these clocks can be connected to the respective pins.

In systems that have only one master clock source available (E1 or T1), that clock should be connected to both MCLKE1 and MCLKT1 inputs for proper operation. T1 or E1 master clocks can be generated from 8kHz, 16kHz, 56kHz, 64kHz, 128kHz and 256kHz external clocks under the control of CLKSEL[2:0] inputs according to Table 1.

NOTE: *EQC[4:0] determine the T1/E1 operating mode. See Table 5 for details.*

The product (or products) mentioned in this data sheet are no longer being manufactured and may not be ordered (OBS)

FIGURE 4. TWO INPUT CLOCK SOURCE

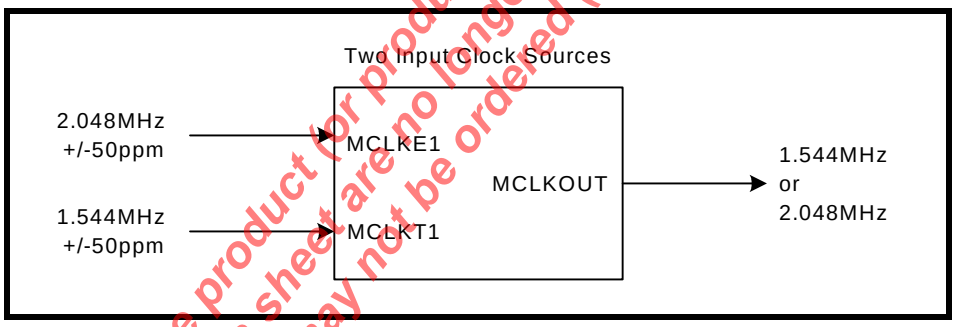

FIGURE 5. ONE INPUT CLOCK SOURCE

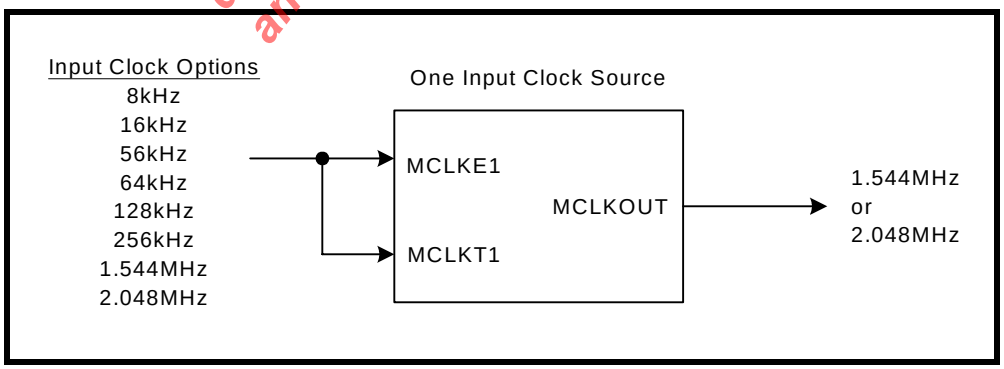

TABLE 1: MASTER CLOCK GENERATOR

MCLKE1 kHz	MCLKT1 kHz	CLKSEL2	CLKSEL1	CLKSEL0	MCLKRATE	MASTER CLOCK kHz
2048	2048	0	0	0	0	2048
2048	2048	0	0	0	1	1544
2048	1544	0	0	0	0	2048
1544	1544	0	0	1	1	1544
1544	1544	0	0	1	0	2048
2048	1544	0	0	1	1	1544
8	x	0	1	0	0	2048
8	x	0	1	0	1	1544
16	x	0	1	1	0	2048
16	x	0	1	1	1	1544
56	x	1	0	0	0	2048
56	x	1	0	0	1	1544
64	x	1	0	1	0	2048
64	x	1	0	1	1	1544
128	x	1	1	0	0	2048
128	x	1	1	0	1	1544
256	x	1	1	1	0	2048
256	x	1	1	1	1	1544

In **Host** mode the programming is achieved through the corresponding interface control bits, the state of the CLKSEL[2:0] control bits and the state of the MCLKRATE interface control bit.

The product (or products) mentioned in this data sheet are no longer being manufactured and may not be ordered (OBS)

RECEIVER

RECEIVER INPUT

At the receiver input, a cable attenuated AMI signal can be coupled to the receiver through a capacitor or a 1:1 transformer. The input signal is first applied to a selective equalizer for signal conditioning. The maximum equalizer gain is up to 36dB for T1 and 43dB for E1 modes. The equalized signal is subsequently applied to a peak detector which in turn controls the equalizer settings and the data slicer. The slicer threshold for both E1 and T1 is typically set at 50% of the peak amplitude at the equalizer output. After the slicers, the digital representation of the AMI signals are applied to the clock and data recovery circuit. The recovered data subsequently goes through the jitter attenuator and decoder (if selected) for HDB3 or B8ZS decoding before being applied to the RPOS/RDATA and RNEG/LCV pins. Clock recovery is accomplished by a digital phase-locked loop (DPLL) which does not require any external components and can tolerate high levels of input jitter that meets or exceeds the ITU-G.823 and TR-TSY000499 standards.

In **Hardware** mode only, this receive channel is turned on upon power-up and is always on. In **Host** mode, the receiver can be turned on or off with the RXON bit. **SEE"MICROPROCESSOR REGISTER #2 BIT DESCRIPTION" ON PAGE 48.**

RECEIVE MONITOR MODE

In applications where Monitor mode is desired, the equalizer can be configured in a gain mode which handles input signals attenuated resistively up to 29dB, along with 0 to 6dB cable attenuation for both T1 and E1 applications, refer to **Table 5** for details. This feature is available in both **Hardware** and **Host** modes.

RECEIVER LOSS OF SIGNAL (RLOS)

For compatibility with ITU G.775 requirements, the RLOS monitoring function is implemented using both analog and digital detection schemes. If the analog RLOS condition occurs, a digital detector is activated to count for 32 consecutive zeros in E1 (4096 bits in Extended Los mode, EXLOS = "1") or 175 consecutive zeros in T1 before RLOS is asserted. RLOS is cleared when the input signal rises +3dB (built in hysteresis) above the point at which it was declared and meets 12.5% ones density of 4 ones in a 32 bit window, with no more than 16 consecutive zeros for E1. In T1 mode, RLOS is cleared when the input signal rises +3dB (built in hysteresis) above the point at which it was declared and contains 16 ones in a 128 bit window with no more than 100 consecutive zeros in the data stream. When loss of signal occurs, RLOS register indication and register status will change. If the RLOS register enable is set high (enabled), the alarm will trigger an interrupt causing the interrupt pin ($\overline{INT}$) to go low. Once the alarm status register has been read, it will automatically reset upon read (RUR), and the $\overline{INT}$ pin will return high.

Analog RLOS

Setting the Receiver Input to -15dB T1/E1 Short Haul Mode

By setting the receiver input to -15dB T1/E1 short haul mode, the equalizer will detect the incoming amplitude and make adjustments by adding gain up to a maximum of +15dB normalizing the T1/E1 input signal.

NOTE: *This setting refers to cable loss (frequency), not flat loss (resistive).*

Once the T1/E1 input signal has been normalized to 0dB by adding the maximum gain (+15dB), the receiver will declare RLOS if the signal is attenuated by an additional -9dB. The total cable loss at RLOS declaration is typically -24dB (-15dB + -9dB). A 3dB hysteresis was designed so that transients will not trigger the RLOS to clear. Therefore, the RLOS will typically clear at a total cable attenuation of -21dB. See **Figure 6** for a simplified diagram.

FIGURE 6. SIMPLIFIED DIAGRAM OF -15dB T1/E1 SHORT HAUL MODE AND RLOS CONDITION

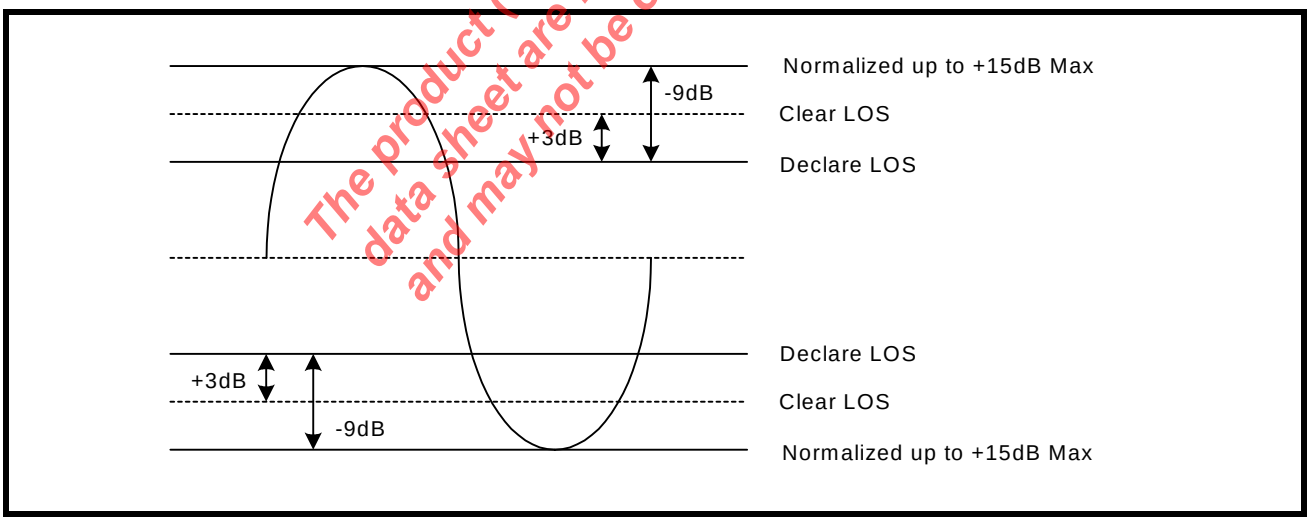

The product (or products) mentioned in this data sheet are no longer being manufactured and may not be ordered (OBS)

Setting the Receiver Input to -29dB T1/E1 Gain Mode

By setting the receiver input to -29dB T1/E1 gain mode, the equalizer will detect the incoming amplitude and make adjustments by adding gain up to a maximum of +29dB normalizing the T1/E1 input signal.

NOTE: *This is the only setting that refers to flat loss (resistive). All other modes refer to cable loss (frequency).*

Once the T1/E1 input signal has been normalized to 0dB by adding the maximum gain (+29dB), the receiver will declare RLOS if the signal is attenuated by an additional -9dB. The total cable loss at RLOS declaration is typically -38dB (-29dB + -9dB). A 3dB hysteresis was designed so that transients will not trigger the RLOS to clear. Therefore, the RLOS will typically clear at a total flat loss of -35dB. See Figure 7 for a simplified diagram.

FIGURE 7. SIMPLIFIED DIAGRAM OF -29dB T1/E1 GAIN MODE AND RLOS CONDITION

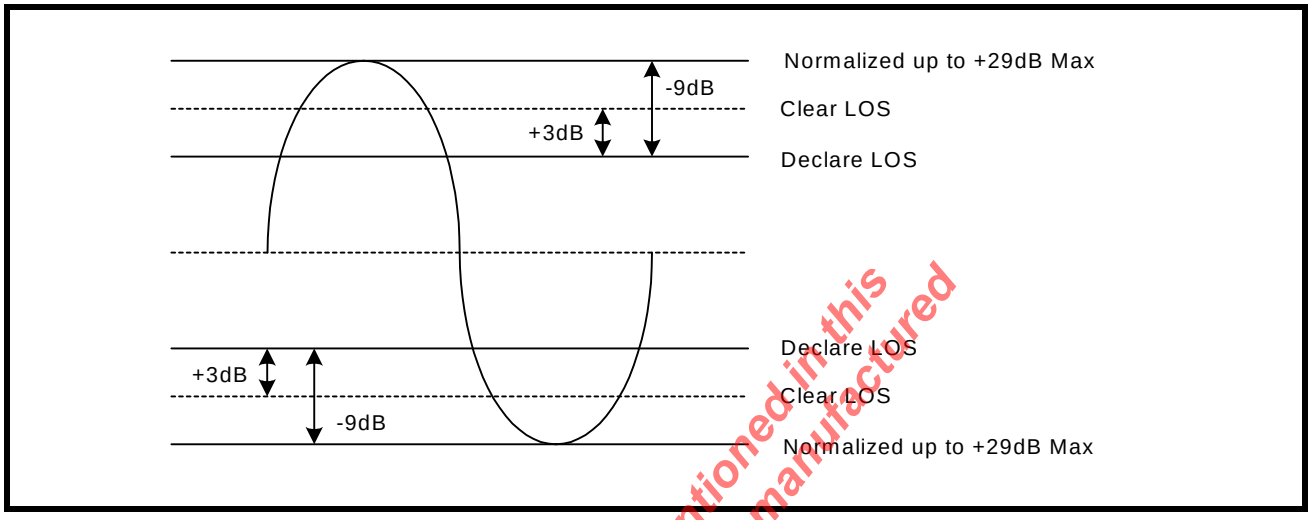

Setting the Receiver Input to -36dB T1/E1 Long Haul Mode

By setting the receiver input to -36dB T1/E1 long haul mode, the equalizer will detect the incoming amplitude and make adjustments by adding gain up to a maximum of +36dB normalizing the T1 input signal. This setting refers to cable loss (frequency), not flat loss (resistive). Once the T1/E1 input signal has been normalized to 0dB by adding the maximum gain (+36dB), the receiver will declare RLOS if the signal is attenuated by an additional -9dB. The total cable loss at RLOS declaration is typically -45dB (-36dB + -9dB). A 3dB hysteresis was designed so that transients will not trigger the RLOS to clear. Therefore, the RLOS will typically clear at a total cable attenuation of -42dB. See Figure 8 for a simplified diagram.

FIGURE 8. SIMPLIFIED DIAGRAM OF -36dB T1/E1 LONG HAUL MODE AND RLOS CONDITION

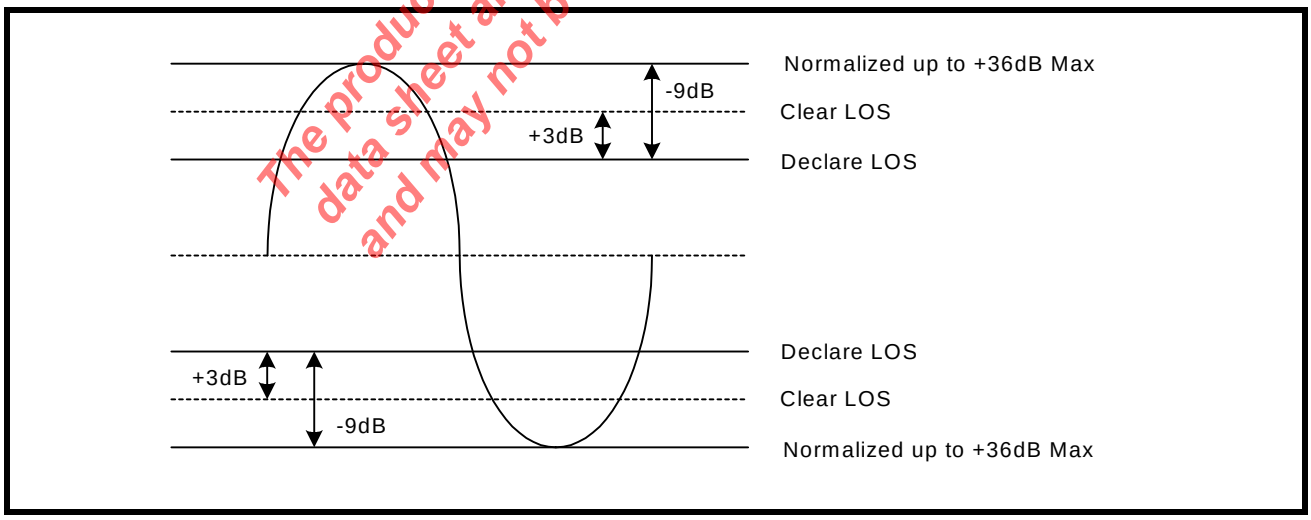

The product (or products) mentioned in this data sheet are no longer being manufactured and may not be ordered (OBS)

E1 Extended RLOS

E1: Setting the Receiver Input to Extended RLOS

By setting the receiver input to extended RLOS, the equalizer will detect the incoming amplitude and make adjustments by adding gain up to a maximum of +43dB normalizing the E1 input signal. This setting refers to

cable loss (frequency), not flat loss (resistive). Once the E1 input signal has been normalized to 0dB by adding the maximum gain (+43dB), the receiver will declare RLOS if the signal is attenuated by an additional -9dB. The total cable loss at RLOS declaration is typically -52dB (-43dB + -9dB). A 3dB hysteresis was designed so that transients will not trigger the RLOS to clear. Therefore, the RLOS will typically clear at a total cable attenuation of -49dB. See Figure 9 for a simplified diagram.

FIGURE 9. SIMPLIFIED DIAGRAM OF EXTENDED RLOS MODE (E1 ONLY)

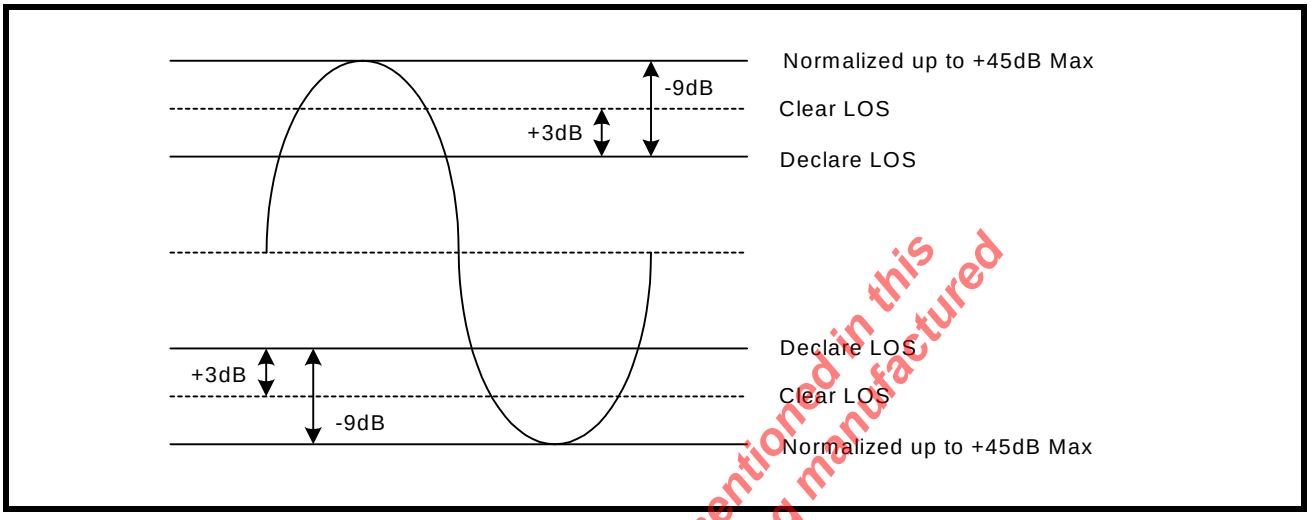

RECEIVE HDB3/B8ZS DECODER

The Decoder function is available in both **Hardware** and **Host** modes by controlling the TNEG/CODE pin or the CODE interface bit. The decoder function is only active in single-rail Mode. When selected, receive data in this mode will be decoded according to HDB3 rules for E1 and B8ZS for T1 systems. Bipolar violations that do not conform to the coding scheme will be reported as Line Code Violation at the RNEG/LCV pin. The length of the LCV pulse is one RCLK cycle for each code violation. Excessive number of zeros in the receive data stream is also reported as an error at the same output pin. If AMI decoding is selected in single rail mode, every bipolar violation in the receive data stream will be reported as an error at the RNEG/LCV pin.

RECOVERED CLOCK (RCLK) SAMPLING EDGE

This feature is available in both **Hardware** and **Host** modes. In **Host** mode, the sampling edge of RCLK output can be changed through the interface control bit RCLKE. If a “1” is written in the RCLKE interface bit, receive data output at RPOS/RDATA and RNEG/LCV are updated on the falling edge of RCLK. Writing a “0” to the RCLKE register, updates the receive data on the rising edge of RCLK. In **Hardware** mode the same feature is available under the control of the RCLKE pin.

FIGURE 10. RECEIVE CLOCK AND OUTPUT DATA TIMING

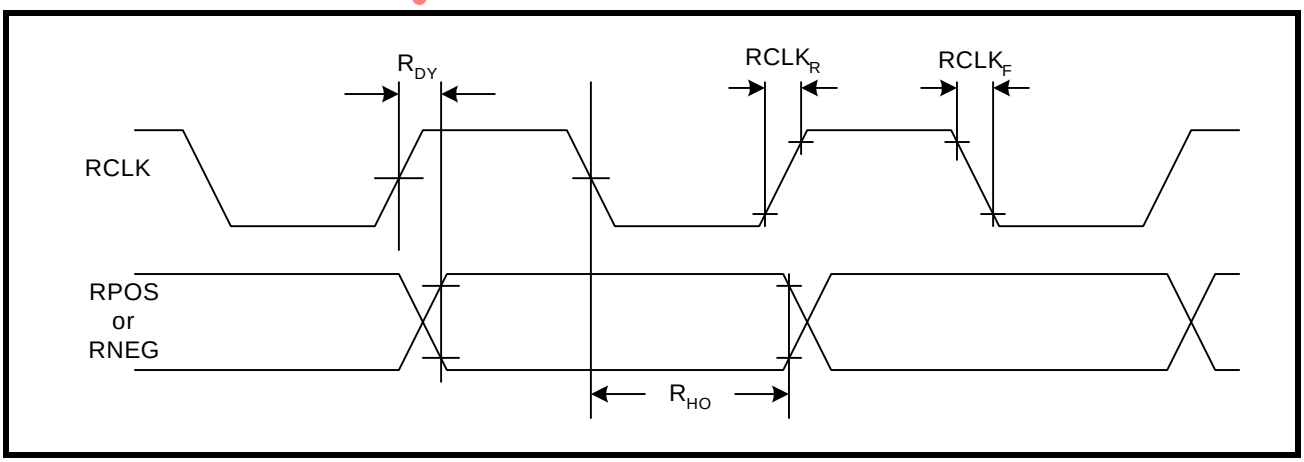

The product (or products) mentioned in this data sheet are no longer being manufactured and may not be ordered (OBS)

JITTER ATTENUATOR

To reduce phase and frequency jitter in the recovered clock, the jitter attenuator can be placed in the receive signal path. The jitter attenuator uses a data FIFO (First In First Out) with a programmable depth that can vary between 2x32 and 2x64. The jitter attenuator can also be placed in the transmit signal path or disabled altogether depending upon system requirements. The jitter attenuator, other than using the master clock as reference, requires no external components. With the jitter attenuator selected, the typical throughput delay from input to output is 16 bits for 32 bit FIFO size or 32 bits for 64 bit FIFO size. When the read and write pointers of the FIFO in the jitter attenuator are within two bits of over-flowing or under-flowing, the bandwidth of the jitter attenuator is widened to track the short term input jitter, thereby avoiding data corruption. When this situation occurs, the jitter attenuator will not attenuate input jitter until the read/write pointer's position is outside the two bits window. Under normal condition, the jitter transfer characteristic meets the narrow bandwidth requirement as specified in ITU- G.736, ITU- I.431 and AT&T Pub 62411 standards.

In T1 mode the Jitter Attenuator Bandwidth is always set to 3Hz. In E1 mode, the bandwidth can be reduced through the JABW control signal. When JABW is set “High” the bandwidth of the jitter attenuator is reduced from 10Hz to 1.5Hz. Under this condition the FIFO length is automatically set to 64 bits and the 32 bits FIFO length will not be available in this mode.

GAPPED CLOCK (JA MUST BE ENABLED IN THE TRANSMIT PATH)

The XRT83L30 LIU is ideal for multiplexer or mapper applications where the network data crosses multiple timing domains. As the higher data rates are de-multiplexed down to T1 or E1 data, stuffing bits are removed which can leave gaps in the incoming data stream. If the jitter attenuator is enabled in the transmit path, the 32-Bit or 64-Bit FIFO is used to smooth the gapped clock into a steady T1 or E1 output. The maximum gap width is shown in Table 2.

TABLE 2: MAXIMUM GAP WIDTH FOR MULTIPLEXER/MAPPER APPLICATIONS

FIFO DEPTH	MAXIMUM GAP WIDTH
32-Bit	20 UI
64-Bit	50 UI

NOTE: *If the LIU is used in a loop timing system, the jitter attenuator should be enabled in the receive path.*

The product(s) mentioned in this data sheet are no longer being manufactured and may not be ordered (ODS)

ARBITRARY PULSE GENERATOR

In T1 mode only, the arbitrary pulse generator divides the pulse into eight individual segments. Each segment is set by a 7-Bit binary word by programming the appropriate register. This allows the system designer to set the overshoot, amplitude, and undershoot for a unique line build out. The MSB (bit 7) is a sign-bit. If the sign-bit is set to “1”, the segment will move in a positive direction relative to a flat line (zero) condition. If this sign-bit is set to “0”, the segment will move in a negative direction relative to a flat line condition. A pulse with numbered segments is shown in **Figure 11**.

FIGURE 11. ARBITRARY PULSE SEGMENT ASSIGNMENT

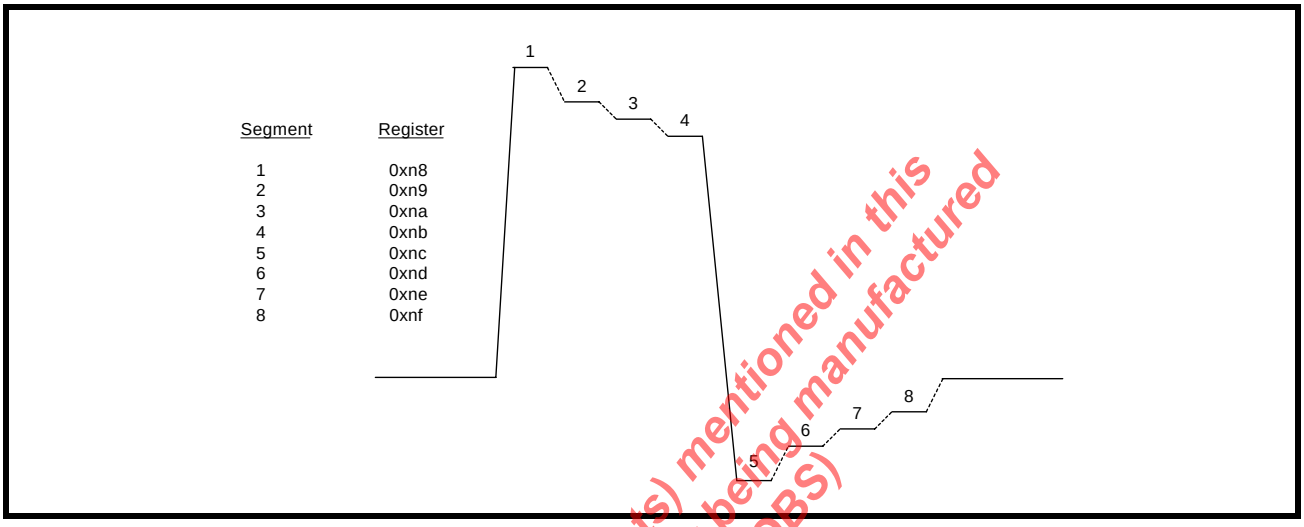

NOTE: *By default, the arbitrary segments are programmed to 0x00h. The transmitter output will result in an all zero pattern to the line.*

TRANSMITTER

DIGITAL DATA FORMAT

Both the transmitter and receiver can be configured to operate in dual or single-rail data formats. This feature is available under both **Hardware** and **Host** control modes. The dual or single-rail data format is determined by the state of the SR/DR pin in **Hardware** mode or SR/DR interface bit in the **Host** mode. In single-rail mode, transmit clock and NRZ data are applied to TCLK and TPOS/TDATA pins respectively. In single-rail and **Hardware** mode the TNEG/CODE input can be used as the CODES function. With TNEG/CODE tied “Low”, HDB3 or B8ZS encoding and decoding are enabled for E1 and T1 modes respectively. With TNEG/CODE tied “High”, the AMI coding scheme is selected. In both dual or single-rail modes of operations, the transmitter converts digital input data to a bipolar format before being transmitted to the line.

TRANSMIT CLOCK (TCLK) SAMPLING EDGE

Serial transmit data at TPOS/TDATA and TNEG/CODE are clocked into the XRT83L30 under the synchronization of TCLK. With a “0” written to the TCLKE interface bit, or by pulling the TCLKE pin “Low”, input data is sampled on the falling edge of TCLK. The sampling edge is inverted with a “1” written to TCLKE interface bit, or by connecting the TCLKE pin “High”.

The product (or products) mentioned in this data sheet are no longer being manufactured and may not be ordered (OBS)

FIGURE 12. TRANSMIT CLOCK AND INPUT DATA TIMING

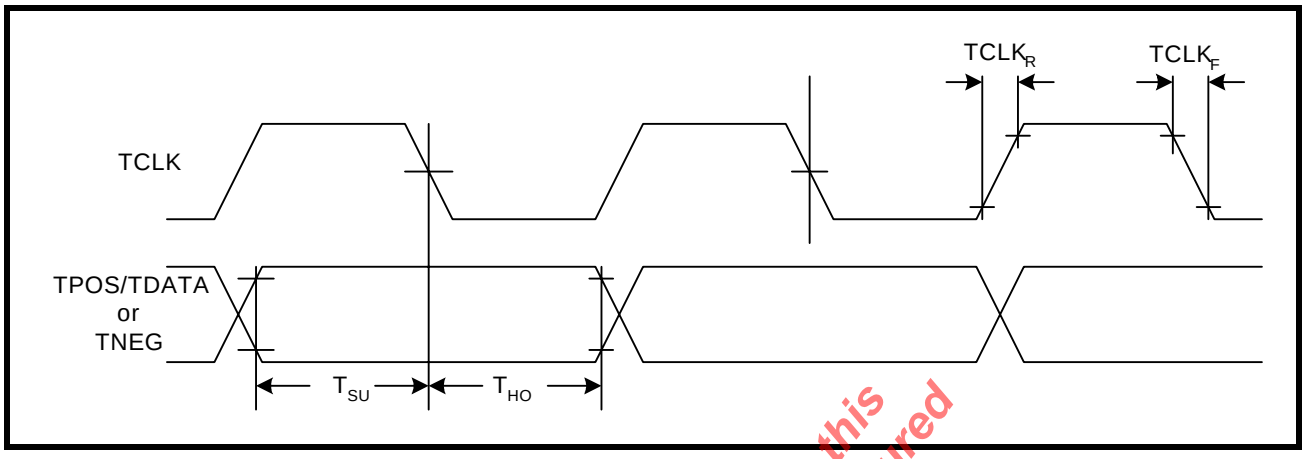

TRANSMIT HDB3/B8ZS ENCODER

The Encoder function is available in both **Hardware** and **Host** modes basis by controlling the TNEG/CODE pin or CODES interface bit. The encoder is only available in single-rail mode. In E1 mode and with HDB3 encoding selected, any sequence with four or more consecutive zeros in the input serial data from TPOS/TDATA, will be removed and replaced with 000V or B00V, where "B" indicates a pulse conforming with the bipolar rule and "V" representing a pulse violating the rule. An example of HDB3 Encoding is shown in **Table 3**. In a T1 system, an input data sequence with eight or more consecutive zeros will be removed and replaced using the B8ZS encoding rule. An example of Bipolar with 8 Zero Substitution (B8ZS) encoding scheme is shown in **Table 4**. Writing a "1" into the CODES interface bit or connecting the TNEG/CODE pin to a "High" level selects the AMI coding for both E1 or T1 systems.

The product (or products) mentioned in this data sheet are no longer being manufactured and may not be ordered (OBS)

TABLE 3: EXAMPLES OF HDB3 ENCODING

	NUMBER OF PULSE BEFORE NEXT 4 ZEROS	NEXT 4 BITS
Input		0000
HDB3 (case1)	odd	000V
HDB3 (case2)	even	B00V

TABLE 4: EXAMPLES OF B8ZS ENCODING

CASE 1	PRECEDING PULSE	NEXT 8 BITS
Input	+	00000000
B8ZS		000VB0VB
AMI Output	+	000+ -0- +
CASE 2		
Input	-	00000000
B8ZS		000VB0VB
AMI Output	-	000- +0+ -

DRIVER FAILURE MONITOR (DMO)

The driver monitor circuit is used to detect transmit driver failure by monitoring the activities at TTIP and TRING. Driver failure may be caused by a short circuit in the primary transformer or system problems at the transmit input. If the transmitter has no output for more than 128 clock cycles, the corresponding DMO pin goes "High" and remains "High" until a valid transmit pulse is detected. In **Host** mode, the failure of the transmit channel is reported in the corresponding interface bit. If the DMOIE bit is also enabled, any transition on the DMO interface bit will generate an interrupt. The driver failure monitor is supported in both **Hardware** and **Host** modes.

TRANSMIT PULSE SHAPER & LINE BUILD OUT (LBO) CIRCUIT

The transmit pulse shaper circuit uses the high speed clock from the Master timing generator to control the shape and width of the transmitted pulse. The internal high-speed timing generator eliminates the need for a tightly controlled transmit clock (TCLK) duty cycle. With the jitter attenuator not in the transmit path, the transmit output will generate no more than 0.025Unit Interval (UI) peak-to-peak jitter. In **Hardware** mode, the state of the EQC[4:0] pins determine the transmit pulse shape. In **Host** mode transmit pulse shape can be controlled using the interface bits EQC[4:0]. The chip supports five fixed transmit pulse settings for T1 Short-haul applications plus a fully programmable waveform generator for arbitrary transmit output pulse shapes. Transmit Line Build-Outs for T1 long-haul application are supported from 0dB to -22.5dB in three 7.5dB steps. The choice of the transmit pulse shape and LBO under the control of the interface bits are summarized in Table 5. For CSU LBO transmit pulse design information, refer to ANSI T1.403-1993 Network-to-Customer Installation specification, Annex-E.

NOTE: *EQC[4:0] determine the T1/E1 operating mode of the XRT83L30. When EQC4 = "1" and EQC3 = "1", the XRT83L30 is in the E1 mode, otherwise it is in the T1/J1 mode.*

The product (or products) mentioned in this data sheet are no longer being manufactured and may not be ordered (OBS)

TABLE 5: RECEIVE EQUALIZER CONTROL AND TRANSMIT LINE BUILD-OUT SETTINGS

EQC4	EQC3	EQC2	EQC1	EQC0	E1/T1 MODE & RECEIVE SENSITIVITY	TRANSMIT LBO	CABLE	CODING
0	0	0	0	0	T1 Long Haul/36dB	0dB	100Ω/ TP	B8ZS
0	0	0	0	1	T1 Long Haul/36dB	-7.5dB	100Ω/ TP	B8ZS
0	0	0	1	0	T1 Long Haul/36dB	-15dB	100Ω/ TP	B8ZS
0	0	0	1	1	T1 Long Haul/36dB	-22.5dB	100Ω/ TP	B8ZS
0	0	1	0	0	T1 Long Haul/45dB	0dB	100Ω/ TP	B8ZS
0	0	1	0	1	T1 Long Haul/45dB	-7.5dB	100Ω/ TP	B8ZS
0	0	1	1	0	T1 Long Haul/45dB	-15dB	100Ω/ TP	B8ZS
0	0	1	1	1	T1 Long Haul/45dB	-22.5dB	100Ω/ TP	B8ZS
0	1	0	0	0	T1 Short Haul/15dB	0-133 ft./ 0.6dB	100Ω/ TP	B8ZS
0	1	0	0	1	T1 Short Haul/15dB	133-266 ft./ 1.2dB	100Ω/ TP	B8ZS
0	1	0	1	0	T1 Short Haul/15dB	266-399 ft./ 1.8dB	100Ω/ TP	B8ZS
0	1	0	1	1	T1 Short Haul/15dB	399-533 ft./ 2.4dB	100Ω/ TP	B8ZS
0	1	1	0	0	T1 Short Haul/15dB	533-655 ft./ 3.0dB	100Ω/ TP	B8ZS
0	1	1	0	1	T1 Short Haul/15dB	Arbitrary Pulse	100Ω/ TP	B8ZS

TABLE 5: RECEIVE EQUALIZER CONTROL AND TRANSMIT LINE BUILD-OUT SETTINGS

EQC4	EQC3	EQC2	EQC1	EQC0	E1/T1 MODE & RECEIVE SENSITIVITY	TRANSMIT LBO	CABLE	CODING
0	1	1	1	0	T1 Gain Mode/29dB	0-133 ft./ 0.6dB	100Ω/ TP	B8ZS
0	1	1	1	1	T1 Gain Mode/29dB	133-266 ft./ 1.2dB	100Ω/ TP	B8ZS
1	0	0	0	0	T1 Gain Mode/29dB	266-399 ft./ 1.8dB	100Ω/ TP	B8ZS
1	0	0	0	1	T1 Gain Mode/29dB	399-533 ft./ 2.4dB	100Ω/ TP	B8ZS
1	0	0	1	0	T1 Gain Mode/29dB	533-655 ft./ 3.0dB	100Ω/ TP	B8ZS
1	0	0	1	1	T1 Gain Mode/29dB	Arbitrary Pulse	100Ω/ TP	B8ZS
1	0	1	0	0	T1 Gain Mode/29dB	0dB	100Ω/ TP	B8ZS
1	0	1	0	1	T1 Gain Mode/29dB	-7.5dB	100Ω/ TP	B8ZS
1	0	1	1	0	T1 Gain Mode/29dB	-15dB	100Ω/ TP	B8ZS
1	0	1	1	1	T1 Gain Mode/29dB	-22.5dB	100Ω/ TP	B8ZS
1	1	0	0	0	E1 Long Haul/36dB	ITU G.703	75Ω Coax	HDB3
1	1	0	0	1	E1 Long Haul/36dB	ITU G.703	120Ω TP	HDB3
1	1	0	1	0	E1 Long Haul/43dB	ITU G.703	75Ω Coax	HDB3
1	1	0	1	1	E1 Long Haul/43dB	ITU G.703	120Ω TP	HDB3
1	1	1	0	0	E1 Short Haul	ITU G.703	75Ω Coax	HDB3
1	1	1	0	1	E1 Short Haul	ITU G.703	120Ω TP	HDB3
1	1	1	1	0	E1 Gain Mode	ITU G.703	75Ω Coax	HDB3
1	1	1	1	1	E1 Gain Mode	ITU G.703	120Ω TP	HDB3

The product (or product(s) mentioned in this data sheet are no longer being manufactured and may not be ordered (OBS)

TRANSMIT AND RECEIVE TERMINATIONS

The XRT83L30 is a versatile LIU that can be programmed to use one Bill of Materials (BOM) for worldwide applications for T1, J1 and E1. For specific applications the internal terminations can be disabled to allow the use of existing components and/or designs.

RECEIVER

INTERNAL RECEIVE TERMINATION MODE

In **Hardware** mode, RXTSEL (Pin 44) can be tied "High" to select internal termination mode or tied "Low" to select external termination mode. By default the XRT83L30 is set for external termination mode at power up or at **Hardware** reset.

TABLE 6: RECEIVE TERMINATION CONTROL

RXTSEL	RX TERMINATION
0	EXTERNAL
1	INTERNAL

In **Host** mode, bit 7 in the appropriate register, (**Table 20, "Microprocessor Register #1, Bit Description," on page 47**), is set "High" to select the internal termination mode for the receive channel.

The product (or products) mentioned in this data sheet are no longer being manufactured and may not be ordered (OBS)

FIGURE 13. SIMPLIFIED DIAGRAM FOR THE INTERNAL RECEIVE AND TRANSMIT TERMINATION MODE

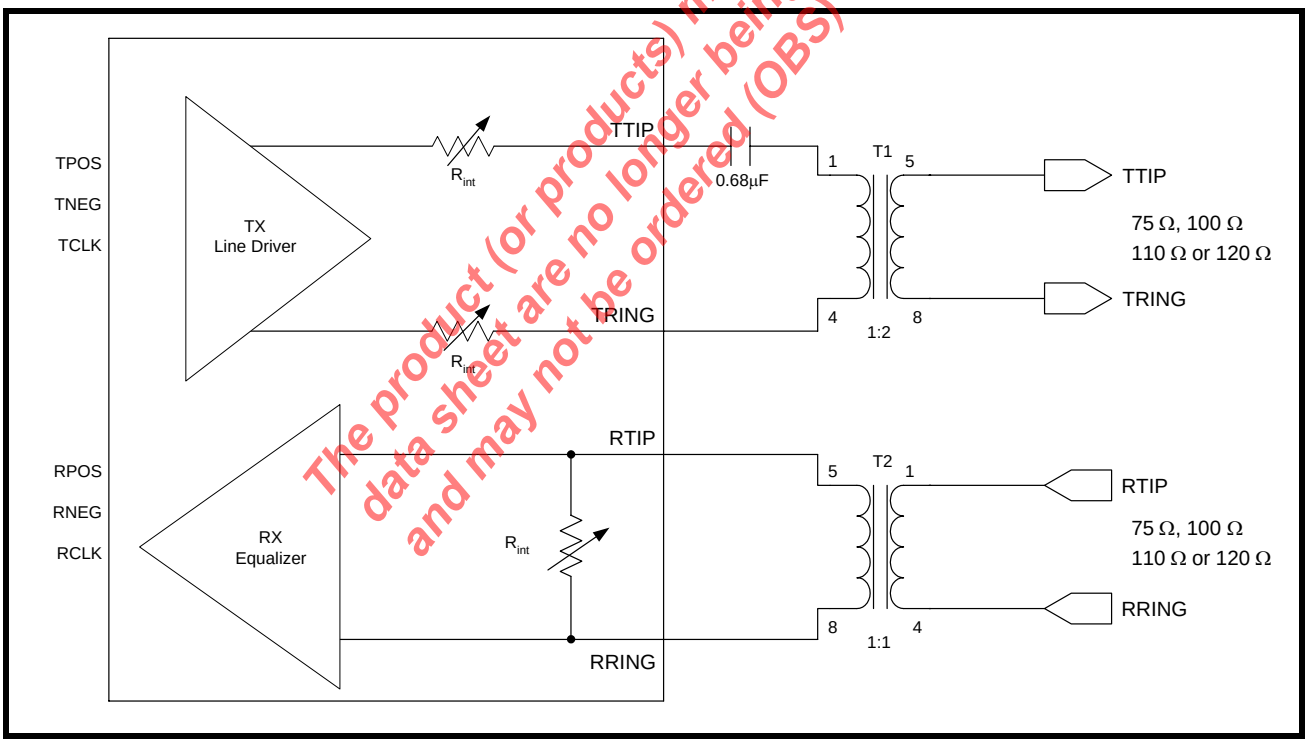

If the internal termination mode (RXTSEL = "1") is selected, the effective impedance for E1, T1 or J1 can be achieved either with an internal resistor or a combination of internal and external resistors as shown in **Table 7**.

TABLE 7: RECEIVE TERMINATIONS

RXTSEL	TERSEL1	TERSEL0	RXRES1	RXRES0	R_{ext}	R_{int}	MODE
0	x	x	x	x	R_{ext}	∞	T1/E1/J1
1	0	0	0	0	∞	100Ω	T1
1	0	1	0	0	∞	110Ω	J1
1	1	0	0	0	∞	75Ω	E1
1	1	1	0	0	∞	120Ω	E1
1	0	0	0	1	240Ω	172Ω	T1
1	0	1	0	1	240Ω	204Ω	J1
1	1	0	0	1	240Ω	108Ω	E1
1	1	1	0	1	240Ω	240Ω	E1
1	0	0	1	0	210Ω	192Ω	T1
1	0	1	1	0	210Ω	232Ω	J1
1	1	0	1	0	210Ω	116Ω	E1
1	1	1	1	0	210Ω	280Ω	E1
1	0	0	1	1	150Ω	300Ω	T1
1	0	1	1	1	150Ω	412Ω	J1
1	1	0	1	1	150Ω	150Ω	E1
1	1	1	1	1	150Ω	600Ω	E1

The product (or products) mentioned in this data sheet are no longer being manufactured and may not be ordered (OBS)

Figure 14 is a simplified diagram for T1 (100Ω) in the external receive termination mode. Figure 15 is a simplified diagram for E1 (75Ω) in the external receive termination mode.

FIGURE 14. SIMPLIFIED DIAGRAM FOR T1 IN THE EXTERNAL TERMINATION MODE (RXTSEL= 0)

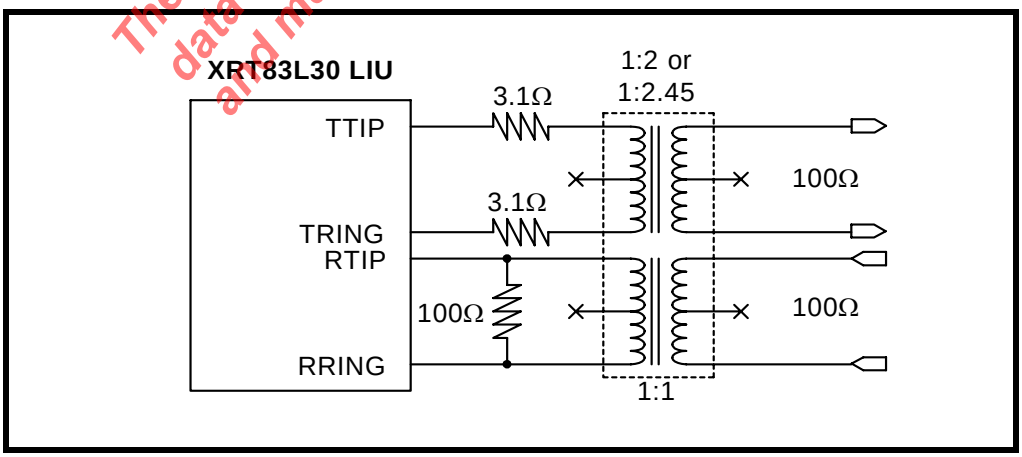

FIGURE 15. SIMPLIFIED DIAGRAM FOR E1 IN EXTERNAL TERMINATION MODE (RXTSEL= 0)

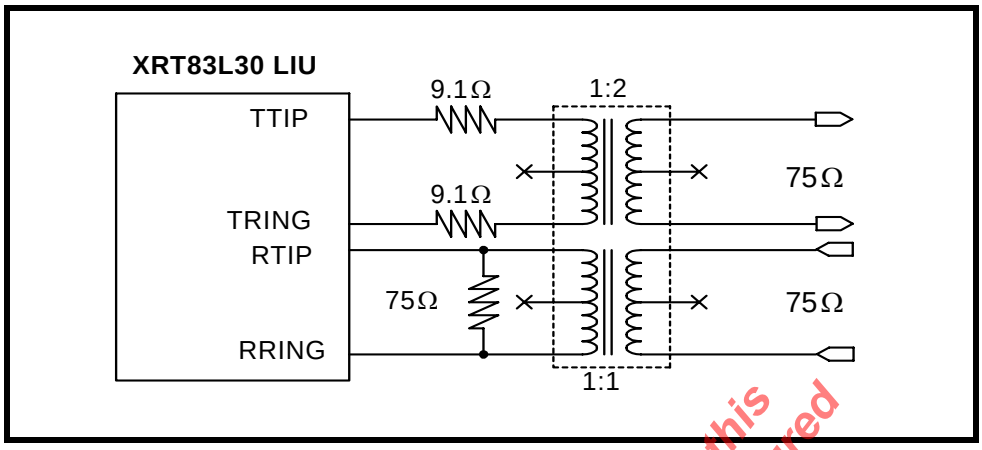

TRANSMITTER

TRANSMIT TERMINATION MODE

In **Hardware** mode, TXTSEL (Pin 45) can be tied "High" to select internal termination mode or tied "Low" for external termination. In **Host** mode, bit 6 in the appropriate register is set "High" to select the internal termination mode for the transmit channel, see **Table 19, "Microprocessor Register #1 bit description," on page 46**.

TABLE 8: TRANSMIT TERMINATION CONTROL

TXTSEL	TX TERMINATION	TX TRANSFORMER RATIO
0	EXTERNAL	1:2.45
1	INTERNAL	1:2

For internal termination, the transformer turns ratio is always 1:2. In internal mode, no external resistors are used. An external capacitor of 0.68µF is used for proper operation of the internal termination circuitry, see **Figure 13**.

TABLE 9: TERMINATION SELECT CONTROL

TERSEL1	TERSEL0	TERMINATION
0	0	100Ω
0	1	110Ω
1	0	75Ω
1	1	120Ω

EXTERNAL TRANSMIT TERMINATION MODE

By default the XRT83L30 is set for external termination mode at power up or at **Hardware** reset.

When external transmit termination mode is selected, the internal termination circuitry is disabled. The value of the external resistors is chosen for a specific application according to the turns ratio selected by TRATIO (Pin 26) in **Hardware** mode or bit 0 in the appropriate register in **Host** mode, see **Table 10** and **Table 21, "Microprocessor Register #3 bit description," on page 50**. **Figure 14** is a simplified block diagram for T1 (100Ω) in the external termination mode. **Figure 15** is a simplified block diagram for E1 (75Ω) in the external termination mode.

The product (or products) mentioned in this data sheet are no longer being manufactured and may not be ordered (OBS)

TABLE 10: TRANSMIT TERMINATION CONTROL

TRATIO	TURNS RATIO
0	1:2
1	1:2.45

Table 11 summarizes the transmit terminations.

TABLE 11: TRANSMIT TERMINATIONS

	TERSEL1	TERSEL0	TXTSEL	TRATIO	R_{int} Ω	n	R_{ext} Ω	C_{ext}
			0=EXTERNAL 1=INTERNAL		SET BY CONTROL BITS	n, R_{ext}, AND C_{ext} ARE SUGGESTED SETTINGS		
T1 100 Ω	0	0	0	0	0Ω	2.45	3.1Ω	0
	0	0	0	1	0Ω	2	3.1Ω	0
	0	0	1	x	25Ω	2	0Ω	0.68µF
J1 110 Ω	0	1	0	0	0Ω	2.45	3.1Ω	0
	0	1	0	1	0Ω	2	3.1Ω	0
	0	1	1	x	27.5Ω	2	0Ω	0.68µF
E1 75 Ω	1	0	0	0	0Ω	2.45	6.2Ω	0
	1	0	0	1	0Ω	2	9.1Ω	0
	1	0	1	x	18.75Ω	2	0Ω	0.68µF
E1 120 Ω	1	1	0	0	0Ω	2.45	6.2Ω	0
	1	1	0	1	0Ω	2	9.1Ω	0
	1	1	1	x	30Ω	2	0Ω	0.68µF

The product (or products) mentioned in this data sheet are no longer being manufactured and may not be ordered (OBS)

REDUNDANCY APPLICATIONS

Telecommunication system design requires signal integrity and reliability. When a T1/E1 primary line card has a failure, it must be swapped with a backup line card while maintaining connectivity to a backplane without losing data. System designers can achieve this by implementing common redundancy schemes with the XRT83L30 Line Interface Unit (LIU). The XRT83L30 offers features that are tailored to redundancy applications while reducing the number of components and providing system designers with solid reference designs. These features allow system designers to implement redundancy applications that ensure reliability. The Internal Impedance mode eliminates the need for external relays when using the 1:1 and 1+1 redundancy schemes.

PROGRAMMING CONSIDERATIONS

In many applications switching the control of the transmitter outputs and the receiver line impedance to **hardware** control will provide faster transmitter ON/OFF switching.

In **Host** Mode, there are two bits in register 18 (12H) that control the transmitter outputs and the Rx line impedance select, TXONCNTL (Bit 5) and TERCNTL (Bit 4).

Setting bit-5 (TXONCNTL) to a "1" transfers the control of the Transmit On/Off function to the TXON **Hardware** control pin (pin 58).

Setting bit-4 (TERCNTL) to a "1" transfers the control of the Rx line impedance select (RXTSEL) to the RXTSEL **Hardware** control pin (pin 44).

Either mode works well with redundancy applications. The user can determine which mode has the fastest switching time for a unique application.

TYPICAL REDUNDANCY SCHEMES

- ·1:1 One backup card for every primary card (Facility Protection)
- ·1+1 One backup card for every primary card (Line Protection)
- ·N+1One backup card for N primary cards

1:1 REDUNDANCY

A 1:1 facility protection redundancy scheme has one backup card for every primary card. When using 1:1 redundancy, the backup card has its transmitters tri-stated and its receivers in high impedance. This eliminates the need for external relays and provides one bill of materials for all interface modes of operation. The transmit and receive sections of the LIU device are described separately.

1+1 REDUNDANCY

A 1+1 line protection redundancy scheme has one backup card for every primary card, and the receivers on the backup card are monitoring the receiver inputs. Therefore, the receivers on both cards need to be active. The transmit outputs require no external resistors. The transmit and receive sections of the LIU device are described separately.

TRANSMIT 1:1 & 1+1 REDUNDANCY

For 1:1 and 1+1 redundancy, the transmitters on the primary and backup card should be programmed for Internal Impedance mode. The transmitters on the backup card should be tri-stated. Select the appropriate impedance for the desired mode of operation, T1/E1/J1. A 0.68uF capacitor is used in series with TTIP for blocking DC bias. See **Figure 16** for a simplified block diagram of the transmit section for 1:1 and 1+1 redundancy scheme.

NOTE: *For simplification, the over voltage protection circuitry was omitted.*

The product (or products) mentioned in this data sheet are no longer being manufactured and may not be ordered (OBS)

FIGURE 16. SIMPLIFIED BLOCK DIAGRAM OF THE TRANSMIT SECTION FOR 1:1 & 1+1 REDUNDANCY

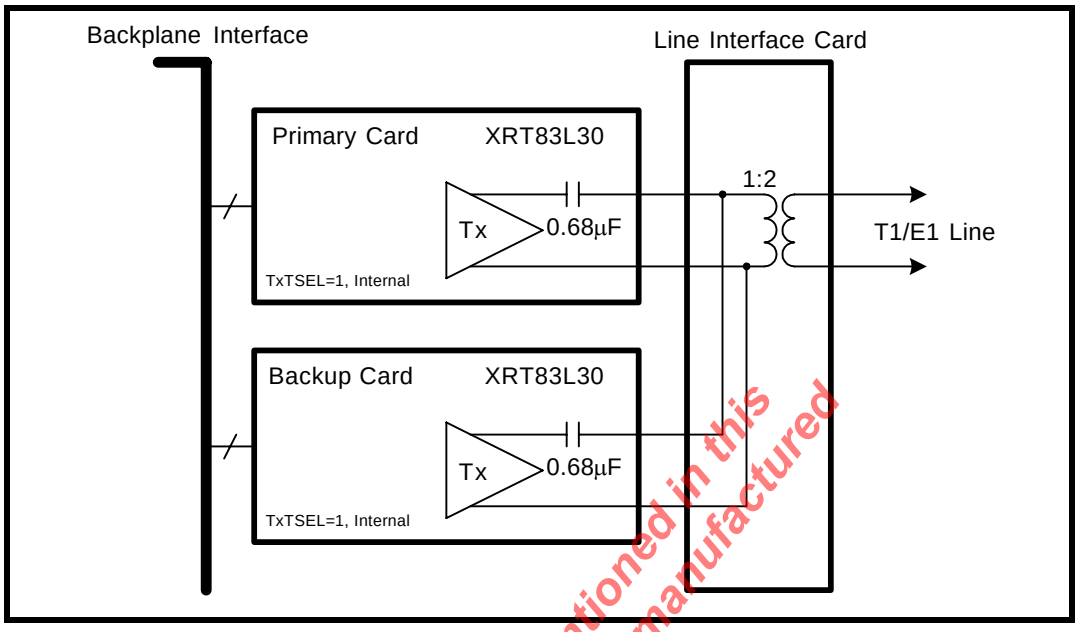

The product (or products) mentioned in this data sheet are no longer being manufactured and may not be ordered (OBS)

RECEIVE 1:1 & 1+1 REDUNDANCY

For 1:1 and 1+1 redundancy, the receivers on the primary card should be programmed for Internal Impedance mode. The receivers on the backup card should be programmed for External Impedance mode. Since there is no external resistor in the circuit, the receivers on the backup card will be high impedance. This key design feature eliminates the need for relays and provides one bill of materials for all interface modes of operation. Select the impedance for the desired mode of operation, T1/E1/J1. To swap the primary card, set the backup card to Internal Impedance mode, then the primary card to External Impedance mode. See **Figure 17** for a simplified block diagram of the receive section for a 1:1 and 1+1 redundancy scheme.

NOTE: *For simplification, the over voltage protection circuitry was omitted.*

FIGURE 17. SIMPLIFIED BLOCK DIAGRAM - RECEIVE SECTION FOR 1:1 AND 1+1 REDUNDANCY

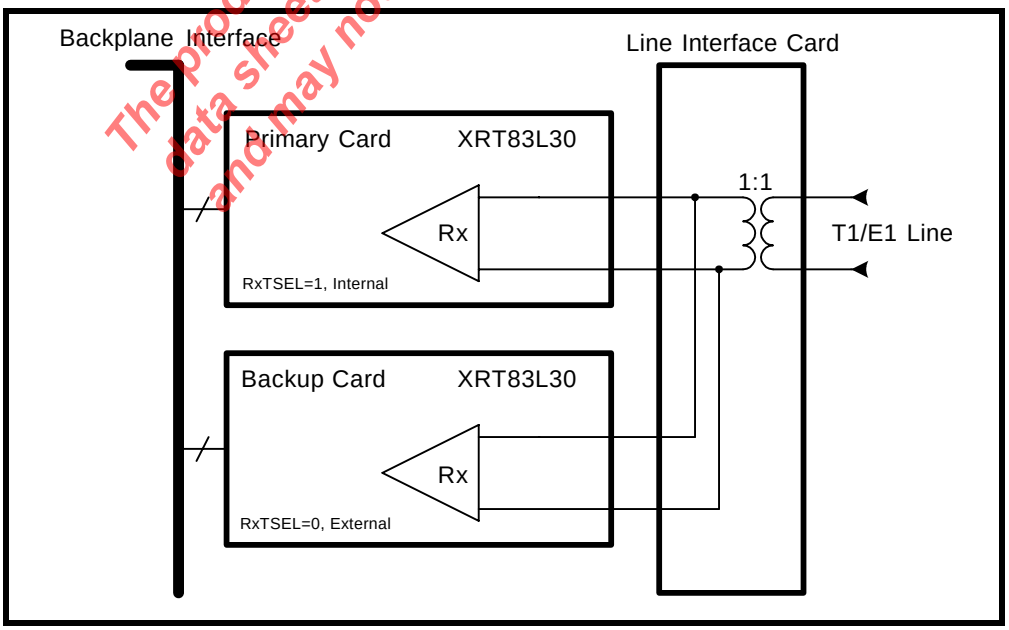

N+1 REDUNDANCY

N+1 redundancy has one backup card for N primary cards. Due to impedance mismatch and signal contention, external relays are necessary when using this redundancy scheme. The advantage of relays is that they create complete isolation between the primary cards and the backup card. This allows all transmitters and receivers on the primary cards to be configured in internal impedance mode, providing one bill of materials for all interface modes of operation. The transmit and receive sections of the XRT83L30 are described separately.

TRANSMIT

For N+1 redundancy, the transmitters on all cards should be programmed for internal impedance mode providing one bill of materials for T1/E1/J1. The transmitters on the backup card do not have to be tri-stated. To swap the primary card, close the desired relays, and tri-state the transmitters on the failed primary card. A 0.68µF capacitor is used in series with TTIP for blocking DC bias. See **Figure 18** for a simplified block diagram of the transmit section for an N+1 redundancy scheme.

NOTE: *For simplification, the over voltage protection circuitry was omitted.*

FIGURE 18. SIMPLIFIED BLOCK DIAGRAM - TRANSMIT SECTION FOR N+1 REDUNDANCY

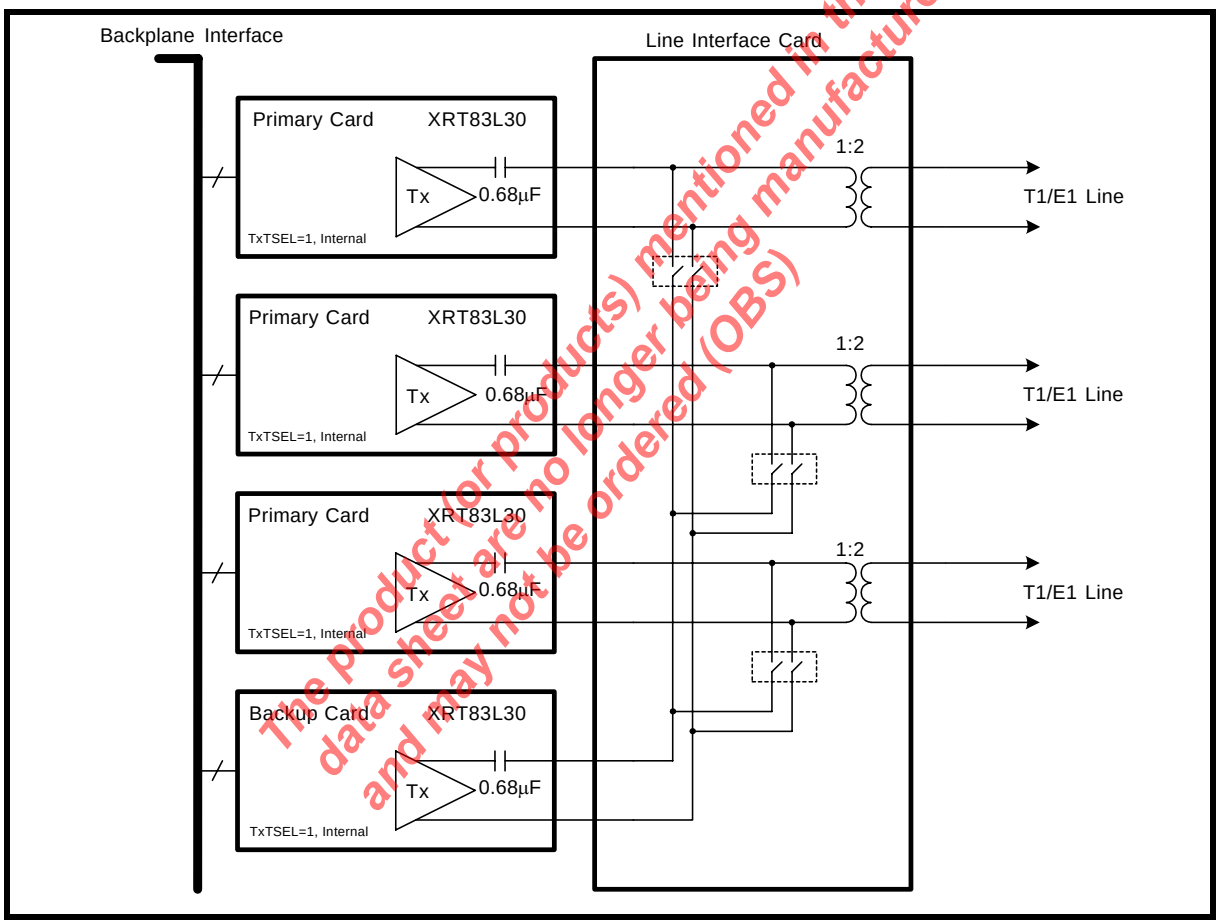

The product (or products) mentioned in this data sheet are no longer being manufactured and may not be ordered (OBS)

RECEIVE

For N+1 redundancy, the receivers on the primary cards should be programmed for internal impedance mode. The receivers on the backup card should be programmed for external impedance mode. Since there is no external resistor in the circuit, the receivers on the backup card will be high impedance. Select the impedance for the desired mode of operation, T1/E1/J1. To swap the primary card, set the backup card to internal impedance mode, then the primary card to external impedance mode. See **Figure 19**. for a simplified block diagram of the receive section for a N+1 redundancy scheme.

NOTE: *For simplification, the over voltage protection circuitry was omitted.*

FIGURE 19. SIMPLIFIED BLOCK DIAGRAM - RECEIVE SECTION FOR N+1 REDUNDANCY

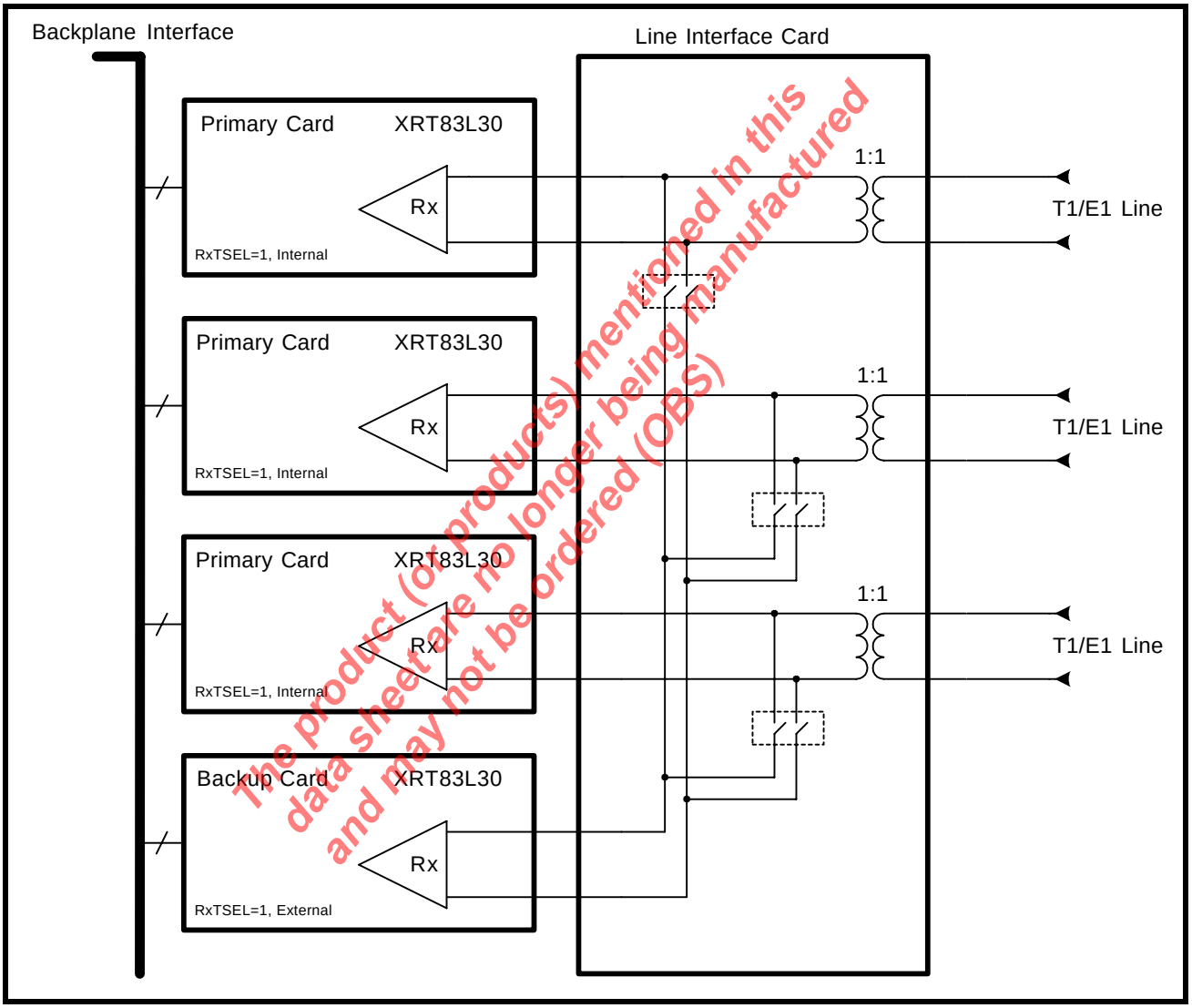

The product (or products) mentioned in this data sheet are no longer being manufactured and may not be ordered (OBS)

PATTERN TRANSMIT AND DETECT FUNCTION

Several test and diagnostic patterns can be generated and detected by the chip. In **Hardware** mode the channel can be programmed to transmit an All Ones pattern by applying a “High” level to the corresponding TAOS pin. In **Host** mode, the three interface bits TXTEST[2:0] control the pattern generation and detection according to Table 12.

TABLE 12: PATTERN TRANSMISSION CONTROL

TXTEST2	TXTEST1	TXTEST0	TEST PATTERN
0	0	0	Transmit Data
0	0	1	TAOS
0	1	0	TLUC
0	1	1	TLDC
1	0	0	TDQRSS
1	0	1	TDQRSS & INVQRSS
1	1	0	TDQRSS & INSBER
1	1	1	TDQRSS & INVQRSS & INSBER

TRANSMIT ALL ONES (TAOS)

This feature is available in both **Hardware** and **Host** modes. When the **Hardware** pins or interface bits TXTEST2="0", TXTEST1="0" and TXTEST0="1", the transmitter ignores input from TPOS/TDATA and TNEG pins and sends a continuous AMI encoded all ones signal to the line using TCLK clock as the reference. When TCLK is not available, MCLK is used. In addition, when the **Hardware** pin or the interface bit ATAOS is activated, the chip will automatically transmit the All Ones data when the receiver detects an RLOS condition. The operation of this feature requires that TCLK not be tied "Low".

NETWORK LOOP CODE DETECTION AND TRANSMISSION

This feature is available in both **Hardware** and **Host** modes. When the **Hardware** pins or interface bits TXTEST2="0", TXTEST1="1" and TXTEST0="0" the chip is enabled to transmit the "00001" Network Loop-Up Code from a request for a loop-back condition from the remote terminal. Simultaneously setting the interface bits NLCDE1="0" and NLCDE0="1" enables the Network Loop-Up code detection in the receiver. If the "00001" Network Loop-Up code is detected in the receive data for longer than 5 seconds, the NLCD bit in the interface register is set indicating that the remote terminal has activated remote Loop-back and the chip is receiving its own transmitted data. When Network Loop-Up code is being transmitted the XRT83L30 will ignore the Automatic Loop-Code detection and Remote Loop-back activation (NLCDE1=”1”, NLCDE0=”1”, if activated) in order to avoid activating Remote Digital Loop-back automatically when the remote terminal responds to the Loop-back request.

When TXTEST2="0", TXTEST1="1" and TXTEST0="1" the chip is enabled to transmit the Network Loop-Down Code "001" from the transmitter requesting the remote terminal the removal of the Loop-Back condition.

In both **Hardware** and **Host** modes the receiver is capable of monitoring the contents of the receive data for the presence of Loop-Up or Loop-Down code from the remote terminal. The **Hardware** pins or interface bits

The product (or products) mentioned in this data sheet are no longer being manufactured and may not be ordered (OBS)

NLCDE[1:0] control the Loop-Code detection according to Table 13.

TABLE 13: LOOP-CODE DETECTION CONTROL

NLCDE1	NLCDE0	CONDITION
0	0	Disable Loop-Code Detection
0	1	Detect Loop-Up Code in Receive Data
1	0	Detect Loop-Down Code in Receive Data
1	1	Automatic Loop-Code detection and Remote Loop-Back Activation

Setting the **Hardware** pins or interface bits NLCDE1="0" and NLCDE0="1" activates the detection of the Loop-Up code in the receive data. If the "00001" Network Loop-Up code is detected in the receive data for longer than 5 seconds the NLCD interface bit is set to "1" and stays in this state for as long as the receiver continues to receive the Network Loop-Up Code. In this mode if the NLCD interrupt is enabled, the chip will initiate an interrupt on every transition of NLCD. The host has the option to ignore the request from the remote terminal, or to respond to the request and manually activate Remote Loop-Back. The host can subsequently activate the detection of the Loop-Down Code by setting NLCDE1="1" and NLCDE0="0". In this case, receiving the "001" Loop-Down Code for longer than 5 seconds will set the NLCD bit to "1" and if the NLCD interrupt is enabled, the chip will initiate an interrupt on every transition of NLCD. The host can respond to the request from the remote terminal and remove Loop-Back condition. In the manual Network Loop-Up (NLCDE1="0" and NLCDE0="1") and Loop-Down (NLCDE1="1" and NLCDE0="0") Code detection modes, the NLCD pin or interface bit will be set to "1" upon receiving the corresponding code in excess of 5 seconds in the receive data. In **Host** mode the chip will initiate an interrupt any time the status of the NLCD bit changes and the Network Loop-code interrupt is enabled.

Setting the **Hardware** pins or interface bits NLCDE1="1" and NLCDE0="1" enables the automatic Loop-Code detection and Remote Loop-Back activation mode if, TXTEST[2:0] is NOT equal to “110”. As this mode is initiated, the state of the NLCD pin or interface bit is reset to "0" and the chip is programmed to monitor the receive input data for the Loop-Up Code. If the "00001" Network Loop-Up Code is detected in the receive data for longer than 5 seconds in addition to setting the NLCD pin or interface bit, Remote loop-back is automatically activated. The chip stays in remote loop-back even if it stops receiving the "00001" pattern. After the chip detects the Loop-Up code, sets the NLCD pin (bit) and enters Remote loop-back, it automatically starts monitoring the receive data for the Loop-Down code. In this mode however, the NLCD pin (bit) stays set even if the receiver stops receiving the Loop-Up code, which is an indication to the host that the Remote loop-back is still in effect. Remote loop-back is removed if the chip detects the "001" Loop-Down code for longer than 5 seconds. Detecting the "001" code also results in resetting the NLCD pin (bit) and initiating an interrupt. The Remote loop-back can also be removed by taking the chip out of the Automatic detection mode by programming it to operate in a different state. The chip will not respond to remote loop-back request if an Analog loop-back is activated locally. When programmed in Automatic detection mode the NLCD pin (bit) stays "High" for the whole time the Remote loop-back is activated and in the **Host** mode it initiates an interrupt any time the status of the NLCD bit changes provided the Network Loop-code interrupt is enabled.

The product (or products) mentioned in this data sheet are no longer being manufactured and may not be ordered (OBS)

TRANSMIT AND DETECT QUASI-RANDOM SIGNAL SOURCE (TDQRSS)

The XRT83L30 includes a QRSS pattern generation and detection block for diagnostic purposes that can be activated only in the **Host** mode by setting the interface bits TXTEST2=”1”, TXTEST1=”0” and TXTEST0=”0”. For T1 systems, the QRSS pattern is a 2^{20}-1pseudo-random bit sequence (PRBS) with no more than 14 consecutive zeros. For E1 systems, the QRSS pattern is 2^{15} -1 PRBS with an inverted output. With QRSS and Analog Local Loop-Back enabled simultaneously, and by monitoring the status of the QRPD interface bit, all main functional blocks within the transceiver can be verified.

When the receiver achieves QRSS synchronization with fewer than 4 errors in a 128 bits window, QRPD changes from “Low” to “High”. After pattern synchronization, any bit error will cause QRPD to go “Low” for one clock cycle. If the QRPDIE bit is enabled, any transition on the QRPD bit will generate an interrupt.

With TDQRSS activated, a bit error can be inserted in the transmitted QRSS pattern by transitioning the INSBER interface bit from “0” to “1”. Bipolar violation can also be inserted either in the QRSS pattern, or input data when operating in the single-rail mode by transitioning the INSBPV interface bit from “0” to “1”. The state of INSBER and INSBPV bits are sampled on the rising edge of the TCLK. To insure the insertion of the bit error or bipolar violation, a “0” should be written in these bit locations before writing a “1”.

The product (or products) mentioned in this data sheet are no longer being manufactured and may not be ordered (OBS)

LOOP-BACK MODES

The XRT83L30 supports several Loop-Back modes under both **Hardware** and **Host** control. In **Hardware** mode the two LOOP[1:0] pins control the Loop-Back functions according to Table 14.

TABLE 14: LOOP-BACK CONTROL IN HARDWARE MODE

LOOP1	LOOP0	LOOP-BACK MODE
0	0	None
0	1	Analog
1	0	Remote
1	1	Digital

In **Host** mode the Loop-Back functions are controlled by the three LOOP[2:0] interface bits. The LIU can be programmed according to Table 15.

TABLE 15: LOOP-BACK CONTROL IN HOST MODE

LOOP2	LOOP1	LOOP0	LOOP-BACK MODE
0	X	X	None
1	0	0	Dual
1	0	1	Analog
1	1	0	Remote
1	1	1	Digital

The product (or products) mentioned in this data sheet are no longer being manufactured and may not be ordered (OBS)

LOCAL ANALOG LOOP-BACK (ALOOP)

With Local Analog Loop-Back activated, the transmit data at TTIP and TRING are looped-back to the analog input of the receiver. External inputs at RTIP/RRING in this mode are ignored while valid transmit data continues to be sent to the line. Local Analog Loop-Back exercises most of the functional blocks of the XRT83L30 including the jitter attenuator which can be selected in either the transmit or receive paths. Local Analog Loop-Back is shown in Figure 20.

FIGURE 20. LOCAL ANALOG LOOP-BACK SIGNAL FLOW

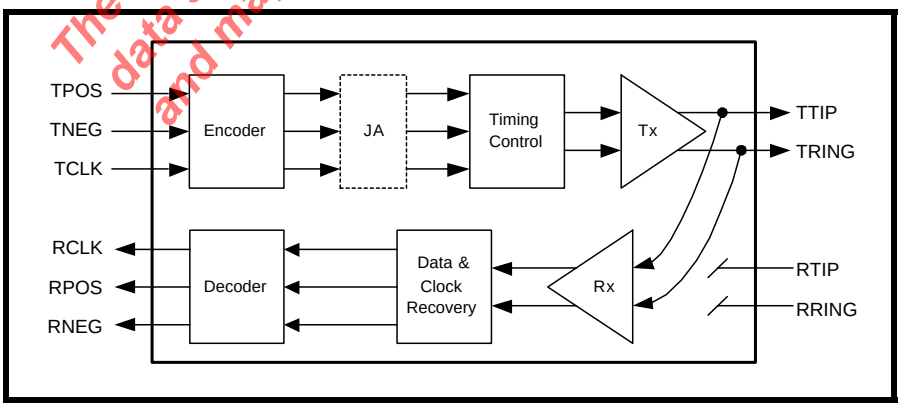

In this mode, the jitter attenuator (if selected) can be placed in the transmit or receive path.

REMOTE LOOP-BACK (RLOOP)

With Remote Loop-Back activated, receive data after the jitter attenuator (if selected in the receive path) is looped back to the transmit path using RCLK as transmit timing. In this mode transmit clock and data are ignored, while RCLK and receive data will continue to be available at their respective output pins. Remote Loop-Back with jitter attenuator selected in the receive path is shown in Figure 21.

FIGURE 21. REMOTE LOOP-BACK MODE WITH JITTER ATTENUATOR SELECTED IN RECEIVE PATH

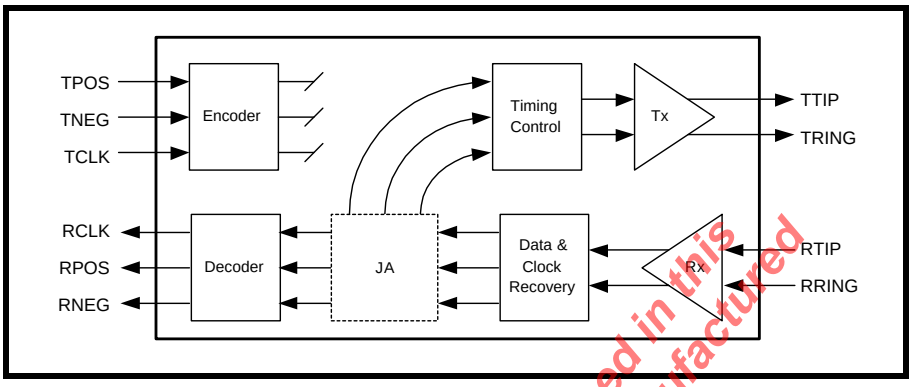

In the Remote Loop-Back mode if the jitter attenuator is selected in the transmit path, the receive data from the Clock and Data Recovery block is looped back to the transmit path and is applied to the jitter attenuator using RCLK as transmit timing. In this mode the transmit clock and data are also ignored, while RCLK and received data will continue to be available at their respective output pins. Remote Loop-Back with the jitter attenuator selected in the transmit path is shown in Figure 22.

FIGURE 22. REMOTE LOOP-BACK MODE WITH JITTER ATTENUATOR SELECTED IN TRANSMIT PATH

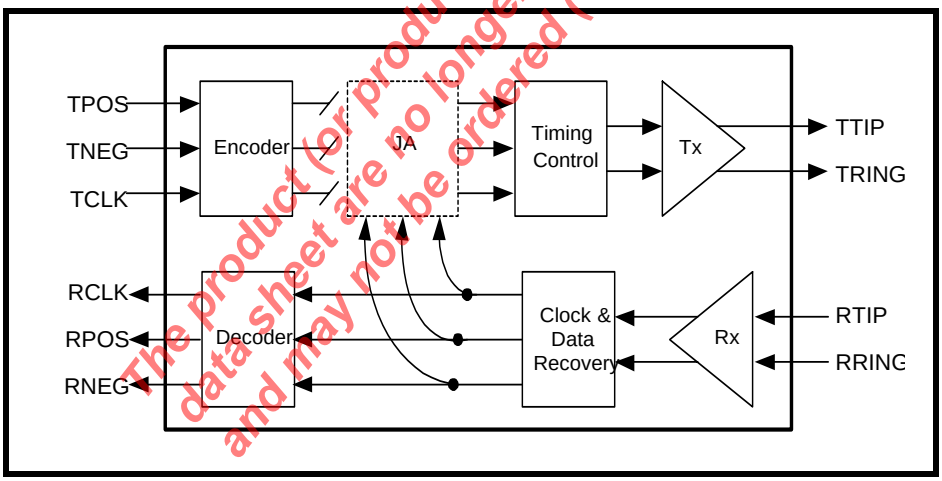

The product (or products) mentioned in this data sheet are no longer being manufactured and may not be ordered (OBS)

DIGITAL LOOP-BACK (DLOOP)

Digital Loop-Back or Local Loop-Back allows the transmit clock and data to be looped back to the corresponding receiver output pins through the encoder/decoder and jitter attenuator. In this mode, receive data and clock are ignored, but the transmit data will be sent to the line uninterrupted. This loop back feature allows users to configure the line interface as a pure jitter attenuator. The Digital Loop-Back signal flow is shown in Figure 23.

FIGURE 23. DIGITAL LOOP-BACK MODE WITH JITTER ATTENUATOR SELECTED IN TRANSMIT PATH

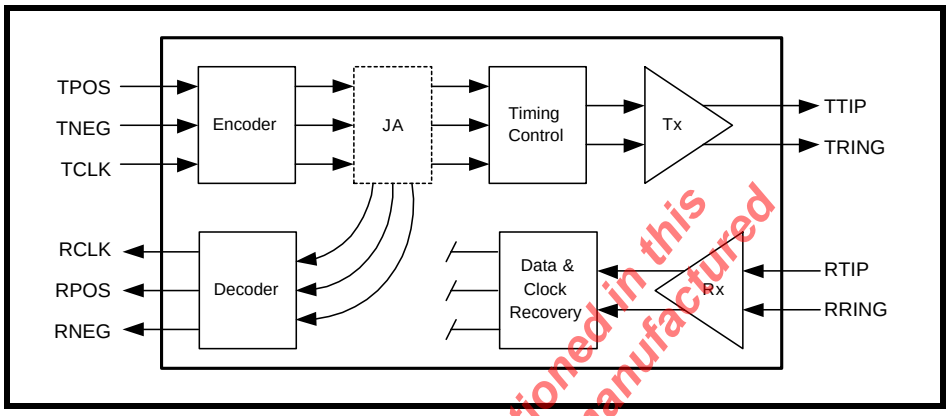

DUAL LOOP-BACK

Figure 24 depicts the data flow in dual-loopback. In this mode, selecting the jitter attenuator in the transmit path will have the same result as placing the jitter attenuator in the receive path. In dual Loop-Back mode the recovered clock and data from the line are looped back through the transmitter to the TTIP and TRING without passing through the jitter attenuator. The transmit clock and data are looped back through the jitter attenuator to the RCLK and RPOS/RDATA and RNEG pins.

FIGURE 24. SIGNAL FLOW IN DUAL LOOP-BACK MODE

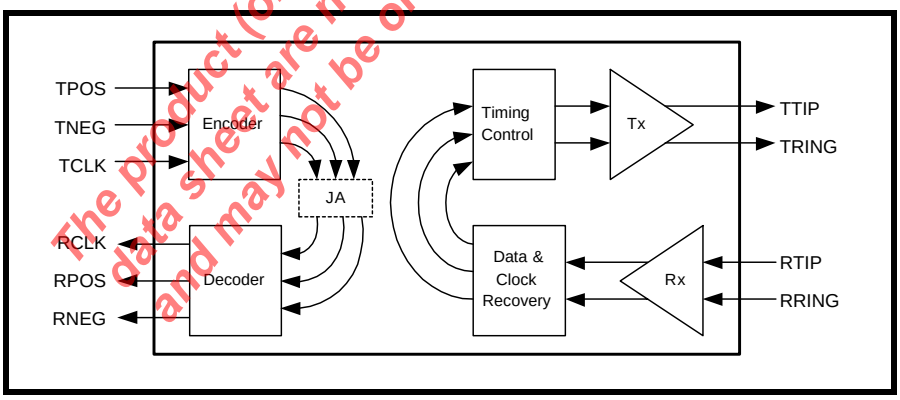

The product (or products) mentioned in this data sheet are no longer being manufactured and may not be ordered (OBS)

HOST MODE SERIAL INTERFACE OPERATION

XRT83L30 has a simple four wire Serial Interface that is compatible with many of the microcontrollers available in the market. The **Host** mode operation is enabled by connecting pin 20 (HW/$\overline{\text{HOST}}$) to a “Low”. The Serial Interface provides a total of 32 “Read/Write” 8-bit registers that consists of the following signals:

$\overline{\text{CS}}$ - Chip Select (Active "Low")

SCLK - Serial Clock

SDI - Serial Data Input

SDO - Serial Data Output

USING THE MICROPROCESSOR SERIAL INTERFACE

The following instructions for using the Microprocessor Serial Interface are best understood by referring to the diagram in **Figure 25**.

In order to use the Serial interface, a clock signal must be applied to the SCLK input pin. The maximum SCLK clock frequency is 20MHz. A Read or Write operation can then be initiated by asserting the active-low Chip Select ($\overline{\text{CS}}$) input pin. For proper operation the $\overline{\text{CS}}$ must be asserted “Low” at least 50ns prior to the first rising edge of the SCLK. Once the $\overline{\text{CS}}$ pin has been asserted, the Read/Write Operation and the target register can be specified through the Serial Interface by writing eight serial bits into the SDI input. Each bit will be clocked on the rising edge of SCLK.The function of the eight bits are identified and described below:

Bit 1: R/$\overline{\text{W}}$ (Read/Write) Bit

This bit is clocked into the SDI input on the first rising edge of the SCLK after $\overline{\text{CS}}$ has been asserted. This bit indicates whether the current operation is a “Read” or a “Write”. A “1” in this bit specifies a Read operation, whereas a “0” specifies a “Write” operation.

The product (or products) mentioned in this data sheet are no longer being manufactured and may not be ordered (OBS)

Bit 2 through 6:The five (5) Address Values (labeled A0, A1, A2, A3 and A4)

The next five rising edges of the SCLK signal, clock in the 5-bit address value for the Read or Write operation. These five bits define the register address within XRT83L30 that the user has selected to read data from or write data to. The address bits must be supplied to the SDI input in ascending order with LSB (Least Significant Bit) first.

Bit 7: (A5)

The next bit A5 must be set to "0" as shown in Figure 25.

Bit 8: (A6)

The value of A6 is a "don't care".

Once the first eight bits have been written into the Serial interface, the subsequent action depends on the whether the current operation is a "Read" or "Write" instruction.

Read Operation

With the last address bit "A4" written into the SDI input, the "Read" operation will proceed through an idle period lasting two SCLK periods. On the rising edge of the 9th SCLK the serial data output (SDO) becomes active (see Figure 25). At this point the user can begin reading the 8-bit data (D0 through D7) stored in the interface register at address [A4,A3,A2,A1,A0], in ascending order (LSB first), on the falling edge of SCLK.

Write Operation

With the last address bit (A4) written into the SDI input, the "Write" operation will proceed through an idle period lasting two SCLK periods. Prior to the rising edge of the 9th SCLK, the user must begin to apply the eight bit data word to the SDI input. The Serial Interface will latch this data on the rising edge of SCLK. The serial data (D0 through D7) should enter the SDI input in ascending order with the LSB first.

Serial Interface Register Description

The serial Interface consists of 32 8-bit register locations. The Microprocessor register address map and Bit map are described in Table 16 and Table 17 respectively. The function of the individual bits are described in Table 18 through Table 36.

The product (or products) mentioned in this data sheet are no longer being manufactured and may not be ordered (OBS)

FIGURE 25. MICROPROCESSOR SERIAL INTERFACE DATA STRUCTURE

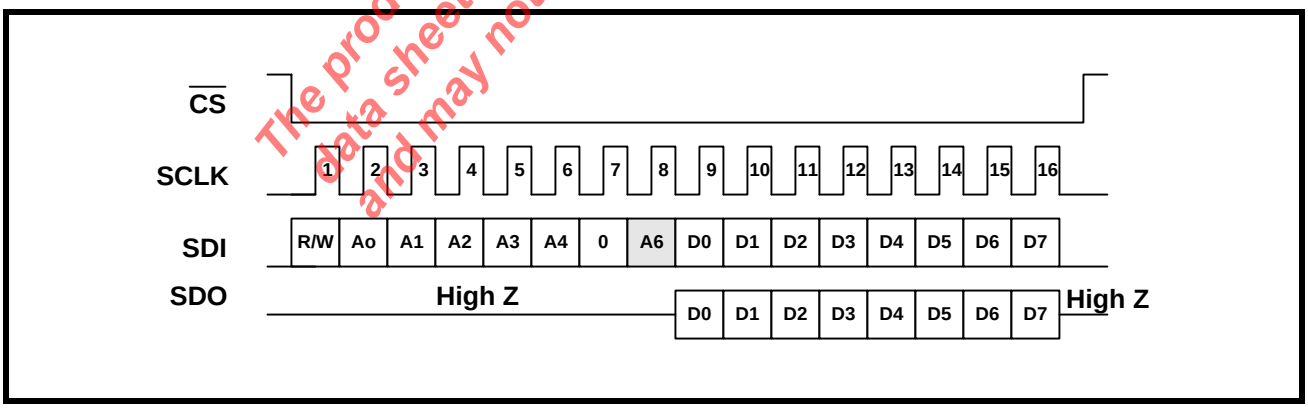

TABLE 16: MICROPROCESSOR REGISTER ADDRESS

REGISTER NUMBER	REGISTER ADDRESS		FUNCTION
	HEX	BINARY	
0 - 18	0x00 - 0x12	00000 - 10010	Command and Control Registers
19 - 21	0x13 - 0x15	10011 - 10101	Reserved
22 - 29	0x16 - 0x1D	10110 - 11101	R/W registers reserved for testing purpose
30	0x1E	11110	Device "ID"
31	0x1F	11111	Device "Revision ID"

TABLE 17: MICROPROCESSOR REGISTER BIT MAP

REG. #	ADDRESS	REG. TYPE	BIT 7	BIT 6	BIT 5	BIT 4	BIT 3	BIT 2	BIT 1	BIT 0
Control Registers										
0	00000 Hex 0x00	R/W	Reserved	Reserved	Reserved	EQC4	EQC3	EQC2	EQC1	EQC0
1	00001 Hex 0x01	R/W	RXTSEL	TXTSEL	TERSEL1	TERSEL0	JASEL1	JASEL0	JABW	FIFOS
2	00010 Hex 0x02	R/W	RXON	TXTEST2	TXTEST1	TXTEST0	TXON	LOOP2	LOOP1	LOOP0
3	00011 Hex 0x03	R/W	NLCDE1	NLCDE0	CODES	RXRES1	RXRES0	INSBPV	Reserved	TRATIO
4	00100 Hex 0x04	R/W	GIE	DMOIE	FLSIE	LCVIE	NLCDIE	AISDIE	RLOSIE	QRPDIE
5	00101 Hex 0x05	RO	Reserved	DMO	FLS	LCV	NLCD	AISD	RLOS	QRPD
6	00110 Hex 0x06	RUR	Reserved	DMOIS	FLSIS	LCVIS	NLCDIS	AISDIS	RLOSIS	QRPDIS
7	00111 Hex 0x07	RO	Reserved	Reserved	CLOS5	CLOS4	CLOS3	CLOS2	CLOS1	CLOS0
8	01000 Hex 0x08	R/W	X	B6S1	B5S1	B4S1	B3S1	B2S1	B1S1	B0S1
9	01001 Hex 0x09	R/W	X	B6S2	B5S2	B4S2	B3S2	B2S2	B1S2	B0S2
10	01010 Hex 0x0A	R/W	X	B6S3	B5S3	B4S3	B3S3	B2S3	B1S3	B0S3
11	01011 Hex 0x0B	R/W	X	B6S4	B5S4	B4S4	B3S4	B2S4	B1S4	B0S4
12	01100 Hex 0x0C	R/W	X	B6S5	B5S5	B4S5	B3S5	B2S5	B1S5	B0S5
13	01101 Hex 0x0D	R/W	X	B6S6	B5S6	B4S6	B3S6	B2S6	B1S6	B0S6
14	01110 Hex 0x0E	R/W	X	B6S7	B5S7	B4S7	B3S7	B2S7	B1S7	B0S7

The product (or products) mentioned in this data sheet are no longer being manufactured and may not be ordered (OBS)

TABLE 17: MICROPROCESSOR REGISTER BIT MAP

REG. #	ADDRESS	REG. TYPE	BIT 7	BIT 6	BIT 5	BIT 4	BIT 3	BIT 2	BIT 1	BIT 0
15	01111 Hex 0x0F	R/W	X	B6S8	B5S8	B4S8	B3S8	B2S8	B1S8	B0S8
16	10000 Hex 0x10	R/W	SR/$\overline{DR}$	ATAOS	RCLKE	TCLKE	DATAP	Reserved	Reserved	SRESET
17	10001 Hex 0x11	R/W	Reserved	CLKSEL2	CLKSEL1	CLKSEL0	MCLKRATE	RXMUTE	EXLOS	ICT
18	10010 Hex 0x12	R/W	GAUGE1	GAUGE0	TXONCNTL	TERCNTL	SL_1	SL_0	EQG_1	EQG_0
			Reset = 0	Reset = 0	Reset = 0	Reset = 0	Reset = 0	Reset = 0	Reset = 0	Reset = 0
Unused Registers										
19	10011 Hex 0x13	R/W	Reserved	Reserved	Reserved	Reserved	Reserved	Reserved	Reserved	Reserved
20	10100 Hex 0x14	R/W	Reserved	Reserved	Reserved	Reserved	Reserved	Reserved	Reserved	Reserved
21	10101 Hex 0x15	R/W	Reserved	Reserved	Reserved	Reserved	Reserved	Reserved	Reserved	Reserved
Test Registers										
22	10110 Hex 0x16	R/W	Test byte 0							
23	10111 Hex 0x17	R/W	Test byte 1							
24	11000 Hex 0x18	R/W	Test byte 2							
25	11001 Hex 0x19	R/W	Test byte 3							
26	11010 Hex 0x1A	R/W	Test byte 4							
27	11011 Hex 0x1B	R/W	Test byte 5							
28	11100 Hex 0x1C	R/W	Test byte 6							
29	11101 Hex 0x1D	R/W	Test byte 7							
ID Registers										
30	11110 Hex 0x1E		DEVICE ID ⇒ F9							
31	11111 Hex 0x1F		DEVICE "Revision ID"							

The product (or products) mentioned in this data sheet are no longer being manufactured and may not be ordered (OBS)

TABLE 18: MICROPROCESSOR REGISTER #0 BIT DESCRIPTION

REGISTER ADDRESS 00000		FUNCTION	REGISTER TYPE	RESET VALUE
BIT #	NAME			
D7	Reserved		R/W	0
D6	Reserved		R/W	0
D5	Reserved		R/W	0
D4	EQC4	**Equalizer Control bit 4:** This bit together with EQC[3:0] are used for controlling transmit pulse shaping, transmit line build-out (LBO), receive monitoring and also T1 or E1 mode of operation. See Table 5 for description of Equalizer Control bits.	R/W	0
D3	EQC3	**Equalizer Control bit 3:** See bit D4 description for function of this bit	R/W	0
D2	EQC2	**Equalizer Control bit 2:** See bit D4 description for function of this bit	R/W	0
D1	EQC1	**Equalizer Control bit 1:** See bit D4 description for function of this bit	R/W	0
D0	EQC0	**Equalizer Control bit 0:** See bit D4 description for function of this bit	R/W	0

The product (or products) mentioned in this data sheet are no longer being manufactured and may not be ordered (OBS)

TABLE 19: MICROPROCESSOR REGISTER #1 BIT DESCRIPTION

<table>
<tr><th colspan="2">REGISTER ADDRESS 00001</th><th rowspan="2">FUNCTION</th><th rowspan="2">REGISTER TYPE</th><th rowspan="2">RESET VALUE</th></tr>
<tr><th>BIT #</th><th>NAME</th></tr>
<tr><td>D7</td><td>RXTSEL</td><td>Receiver Termination Select: In Host mode, this bit is used to select between the internal and external line termination modes for the receiver according to the following table:
<table>
<tr><th>RXTSEL</th><th>RX Termination</th></tr>
<tr><td>0</td><td>External</td></tr>
<tr><td>1</td><td>Internal</td></tr>
</table></td><td>R/W</td><td>0</td></tr>
<tr><td>D6</td><td>TXTSEL</td><td>Transmit Termination Select: In Host mode, this bit is used to select between the internal and external line termination modes for the transmitter according to the following table:
<table>
<tr><th>TXTSEL</th><th>TX Termination</th></tr>
<tr><td>0</td><td>External</td></tr>
<tr><td>1</td><td>Internal</td></tr>
</table></td><td>R/W</td><td>0</td></tr>
<tr><td>D5</td><td>TERSEL1</td><td>Termination Impedance Select bit 1:
In the Host mode and in the internal termination mode (TXTSEL="1" and RXTSEL="1"), TERSEL[1:0] control the transmit and receive termination impedance according to the following table:
<table>
<tr><th>TERSEL1</th><th>TERSEL0</th><th>Termination</th></tr>
<tr><td>0</td><td>0</td><td>100Ω</td></tr>
<tr><td>0</td><td>1</td><td>110Ω</td></tr>
<tr><td>1</td><td>0</td><td>75Ω</td></tr>
<tr><td>1</td><td>1</td><td>120Ω</td></tr>
</table>
In the internal termination mode, the receiver termination of each receiver is realized completely by internal resistors or by the combination of internal and one fixed resistor (see description for RXRES[1:0] bits).
In the internal termination mode, the transmitter output should be AC coupled to the transformer.</td><td>R/W</td><td>0</td></tr>
<tr><td>D4</td><td>TERSEL0</td><td>Termination Impedance Select bit 0:
See description of bit D5 for the function of this bit.</td><td>R/W</td><td>0</td></tr>
</table>

The product(s) mentioned in this data sheet are no longer being manufactured and may not be ordered (OBS)

TABLE 19: MICROPROCESSOR REGISTER #1 BIT DESCRIPTION

<table>
<tr><td>D3</td><td>JASEL1</td><td>Jitter Attenuator select bit 1: The JASEL1 and JASEL0 bits are used to disable or place the jitter attenuator in the transmit or receive path.
<table>
<tr><th>JASEL1 bit D3</th><th>JASEL0 bit D2</th><th>JA Path</th></tr>
<tr><td>0</td><td>0</td><td>JA Disabled</td></tr>
<tr><td>0</td><td>1</td><td>JA in Transmit Path</td></tr>
<tr><td>1</td><td>0</td><td>JA in Receive Path</td></tr>
<tr><td>1</td><td>1</td><td>JA in Receive Path</td></tr>
</table></td><td>R/W</td><td>0</td></tr>
<tr><td>D2</td><td>JASEL0</td><td>Jitter Attenuator select bit 0: See description of bit D3 for the function of this bit.</td><td>R/W</td><td>0</td></tr>
<tr><td>D1</td><td>JABW</td><td>Jitter Attenuator Bandwidth Select:
In E1 mode, set this bit to "1" to select a 1.5Hz Bandwidth for the Jitter Attenuator In E1 mode. The FIFO length will be automatically set to 64 bits.

Set this bit to "0" to select 10Hz Bandwidth for the Jitter Attenuator in E1 mode.

In T1 mode the Jitter Attenuator Bandwidth is permanently set to 3Hz, and the state of this bit has no effect on the Bandwidth.
<table>
<tr><th>Mode</th><th>JABW bit D1</th><th>FIFOS_n bit D0</th><th>JA B-W Hz</th><th>FIFO Size</th></tr>
<tr><td>T1</td><td>0</td><td>0</td><td>3</td><td>32</td></tr>
<tr><td>T1</td><td>0</td><td>1</td><td>3</td><td>64</td></tr>
<tr><td>T1</td><td>1</td><td>0</td><td>3</td><td>32</td></tr>
<tr><td>T1</td><td>1</td><td>1</td><td>3</td><td>64</td></tr>
<tr><td>E1</td><td>0</td><td>0</td><td>10</td><td>32</td></tr>
<tr><td>E1</td><td>0</td><td>1</td><td>10</td><td>64</td></tr>
<tr><td>E1</td><td>1</td><td>0</td><td>1.5</td><td>64</td></tr>
<tr><td>E1</td><td>1</td><td>1</td><td>1.5</td><td>64</td></tr>
</table></td><td>R/W</td><td>0</td></tr>
<tr><td>D0</td><td>FIFOS</td><td>FIFO Size Select: See table of bit D1 above for the function of this bit.</td><td>R/W</td><td>0</td></tr>
</table>

The product (or products) mentioned in this data sheet are no longer being manufactured and may not be ordered (OBS)

TABLE 20: MICROPROCESSOR REGISTER #2 BIT DESCRIPTION

REGISTER ADDRESS 00010		FUNCTION	REGISTER TYPE	RESET VALUE
BIT #	NAME			
D7	RXON	**Receiver ON:** Writing a “1” into this bit location turns on the Receive Section. Writing a “0” shuts off the Receiver Section. In this mode, RTIP and RRING driver outputs will be tri-stated for power reduction or redundancy applications. Default is "0", off.	R/W	0
D6	TXTEST2	**Transmit Test Pattern bit 2**: This bit together with TXTEST1 and TXTEST0 are used to generate and transmit test patterns according to the following table: TXTEST2 / TXTEST1 / TXTEST0 / Test Pattern 0 / 0 / 0 / Transmit Data 0 / 0 / 1 / TAOS 0 / 1 / 0 / TLUC 0 / 1 / 1 / TLDC 1 / 0 / 0 / TDQRSS 1 / 0 / 1 / TDQRSS & INVQRSS 1 / 1 / 0 / TDQRSS & INSBER 1 / 1 / 1 / TDQRSS & INVQRSS & INS **TDQRSS (Transmit/Detect Quasi-Random Signal):** This condition, when activated, enables Quasi-Random Signal Source generation and detection. In a T1 system QRSS pattern is a 2^{20}-1 pseudo-random bit sequence (PRBS) with no more than 14 consecutive zeros. In a E1 system, QRSS is a 2^{15}-1 PRBS pattern. **TAOS (Transmit All Ones):** Activating this condition enables the transmission of an All Ones Pattern. TCLK must not be tied "Low". **TLUC (Transmit Network Loop-Up Code):** Activating this condition enables the Network Loop-Up Code of "00001" to be transmitted to the line. When Network Loop-Up code is being transmitted, the XRT83L30 will ignore the Automatic Loop-Code detection and Remote Loop-Back activation (NLCDE1 =“1”, NLCDE0 =“1”, if activated) in order to avoid activating Remote Digital Loop-Back automatically when the remote terminal responds to the Loop-Back request. **TLDC (Transmit Network LOOP-Down Code):** Activating this condition enables the network Loop-Down Code of "001" to be transmitted to the line.	R/W	0
D5	TXTEST1	**Transmit Test pattern bit 1:** See description of bit D6 for the function of this bit.	R/W	0
D4	TXTEST0	**Transmit Test Pattern bit 0:** See description of bit D6 for the function of this bit.	R/W	0

The product (or products) mentioned in this data sheet are no longer being manufactured and may not be ordered (OBS)

TABLE 20: MICROPROCESSOR REGISTER #2 BIT DESCRIPTION

<table>
<tr><td>D3</td><td>TXON</td><td>Transmitter ON: Writing a "1" into this bit location turns on the Transmit Section. A ‘0’ in this bit location, shuts off the transmitter. In this mode the TTIP and TRING driver outputs will be tri-stated for power reduction or redundancy applications.</td><td>R/W</td><td>0</td></tr>
<tr><td>D2</td><td>LOOP2</td><td>Loop-Back control bit 2: This bit together with the LOOP1 and LOOP0 bits control the Loop-Back modes of the chip according to the following table:
<table>
<tr><th>LOOP2</th><th>LOOP1</th><th>LOOP0</th><th>Loop-Back Mode</th></tr>
<tr><td>0</td><td>X</td><td>X</td><td>No Loop-Back</td></tr>
<tr><td>1</td><td>0</td><td>0</td><td>Dual Loop-Back</td></tr>
<tr><td>1</td><td>0</td><td>1</td><td>Analog Loop-Back</td></tr>
<tr><td>1</td><td>1</td><td>0</td><td>Remote Loop-Back</td></tr>
<tr><td>1</td><td>1</td><td>1</td><td>Digital Loop-Back</td></tr>
</table></td><td>R/W</td><td>0</td></tr>
<tr><td>D1</td><td>LOOP1</td><td>Loop-Back control bit 1: See description of bit D2 for the function of this bit.</td><td>R/W</td><td>0</td></tr>
<tr><td>D0</td><td>LOOP0</td><td>Loop-Back control bit 0: See description of bit D2 for the function of this bit.</td><td>R/W</td><td>0</td></tr>
</table>

The product (or products) mentioned in this data sheet are no longer being manufactured and may not be ordered (OBS)

TABLE 21: MICROPROCESSOR REGISTER #3 BIT DESCRIPTION

<table>
<tr><th colspan="2">REGISTER ADDRESS 00011</th><th rowspan="2">FUNCTION</th><th rowspan="2">REGISTER TYPE</th><th rowspan="2">RESET VALUE</th></tr>
<tr><th>BIT #</th><th>NAME</th></tr>
<tr><td>D7</td><td>NLCDE1</td><td>Network Loop Code Detection Enable bit 1:
This bit together with NLCDE0, Control the Loop-Code detection according to the following table:
<table>
<tr><th>NLCDE1</th><th>NLCDE0</th><th>Function</th></tr>
<tr><td>0</td><td>0</td><td>Disable Loop-Code Detection</td></tr>
<tr><td>0</td><td>1</td><td>Detect Loop-Up Code in Receive Data</td></tr>
<tr><td>1</td><td>0</td><td>Detect Loop-Down Code in Receive Data</td></tr>
<tr><td>1</td><td>1</td><td>Automatic Loop-Code Detection</td></tr>
</table>
When NLCDE1=”0” and NCLDE0=”1”, or NLCDE1=”1” and NLCDE0=”0”, the chip is manually programed to monitor the receive data for the Loop-Up or Loop-Down code respectively. When the presence of the “00001” or “001” pattern is detected for more than 5 seconds, the status of the NLCD bit is set to “1” and if the NLCD interrupt is enabled an interrupt is initiated. The Host has the option to control the Loop-Back function manually.
Setting the NLCDE1=”1” and NLCDE0=”1” enables the Automatic Loop-Code detection and Remote-Loop-Back activation mode. As this mode is initiated, the state of the NLCD interface bit is reset to “0” and the chip is programmed to monitor the receive data for the Loop-Up Code. If the “00001” pattern is detected for longer than 5 seconds, the NLCD bit is set to “1”, Remote Loop-Back is activated and the chip is automatically programed to monitor the receive data for the Loop-Down code. The NLCD bit stays set even after the chip stops receiving the Loop-Up code. The remote Loop-Back condition is removed when the chip receives the Loop-Down code for more than 5 seconds or if the Automatic Loop-Code detection mode is terminated.</td><td>R/W
R/W</td><td>0
0</td></tr>
<tr><td>D6</td><td>NLCDE0</td><td>Network Loop Code Detection Enable bit 0: See description of bit D7 for the function of this bit.</td><td>R/W</td><td>0</td></tr>
<tr><td>D5</td><td>CODES</td><td>ENCODING and DECODING SELECT:
Writing a “0” to this bit selects HDB3 or B8ZS encoding and decoding. Writing a “1” selects an AMI coding scheme.This bit is only active when single-rail mode is selected.</td><td>R/W</td><td>0</td></tr>
</table>

The product(s) mentioned in this data sheet are no longer being manufactured and may not be ordered (OBS)

TABLE 21: MICROPROCESSOR REGISTER #3 BIT DESCRIPTION

<table>
<tr><td>D4</td><td>RXRES1</td><td>Receive External Resistor Control pin 1: In Host mode, this bit along with the RXRES0 bit selects the value of the external Receive fixed resistor according to the following table:
<table>
<tr><th>RXRES1</th><th>RXRES0</th><th>Required Fixed External RX Resistor</th></tr>
<tr><td>0</td><td>0</td><td>No External Fixed Resistor</td></tr>
<tr><td>0</td><td>1</td><td>60Ω</td></tr>
<tr><td>1</td><td>0</td><td>52.5Ω</td></tr>
<tr><td>1</td><td>1</td><td>37.5Ω</td></tr>
</table></td><td>R/W</td><td>0</td></tr>
<tr><td>D3</td><td>RXRES0</td><td>Receive External Resistor Control bit 0: For function of this bit see description of D4 the RXRES1 bit.</td><td>R/W</td><td>0</td></tr>
<tr><td>D2</td><td>INSBPV</td><td>Insert Bipolar Violation: When this bit transitions from "0" to "1", a bipolar violation is inserted in the transmitted data stream. Bipolar violation can be inserted either in the QRSS pattern, or input data when operating in single-rail mode. The state of this bit is sampled on the rising edge of TCLK.
NOTE: To ensure the insertion of a bipolar violation, a "0" should be written in this bit location before writing a "1".</td><td>R/W</td><td>0</td></tr>
<tr><td>D1</td><td>Reserved</td><td></td><td>R/W</td><td>0</td></tr>
<tr><td>D0</td><td>TRATIO</td><td>Transformer Ratio Select: In the external termination mode, writing a “1” to this bit selects a transformer ratio of 1:2 for the transmitter. Writing a “0” sets the transmitter transformer ratio to 1: 2.45. In the internal termination mode the transmitter transformer ratio is permanently set to 1:2 and the state of this bit has no effect.</td><td>R/W</td><td>0</td></tr>
</table>

The product (or products) mentioned in this data sheet are no longer being manufactured and may not be ordered (OBS)

TABLE 22: MICROPROCESSOR REGISTER #4 BIT DESCRIPTION

REGISTER ADDRESS 00100		FUNCTION	REGISTER TYPE	RESET VALUE
BIT #	NAME			
D7	GIE	**Global Interrupt Enable:** Writing a "1" into this bit, globally enables interrupt generation on the $\overline{\text{INT}}$ pin. Writing a "0" into this bit, globally masks all interrupt requests.	R/W	0
D6	DMOIE	**DMO Interrupt Enable:** Writing a "1" to this bit enables DMO interrupt generation, writing a "0" masks it.	R/W	0
D5	FLSIE	**FIFO Limit Status Interrupt Enable:** Writing a "1" to this bit enables interrupt generation when the FIFO limit is within 3 bits, writing a "0" to masks it.	R/W	0
D4	LCVIE	**Line Code Violation Interrupt Enable:** Writing a "1" to this bit enables Line Code Violation interrupt generation, writing a "0" masks it.	R/W	0
D3	NLCDIE	**Network Loop-Code Detection Interrupt Enable:** Writing a "1" to this bit enables Network Loop-code detection interrupt generation, writing a "0" masks it.	R/W	0
D2	AISDIE	**AIS Detection Interrupt Enable:** Writing a "1" to this bit enables Alarm Indication Signal detection interrupt generation, writing a "0" masks it.	R/W	0
D1	RLOSIE	**Receive Loss of Signal Interrupt Enable:** Writing a "1" to this bit enables Loss of Receive Signal interrupt generation, writing a "0" masks it.	R/W	0
D0	QRPDIE	**QRSS Pattern Detection Interrupt Enable:** Writing a "1" to this bit enables QRSS pattern detection interrupt generation, writing a "0" masks it.	R/W	0

The product(s) mentioned in this data sheet are no longer being manufactured and may not be ordered (OBS)

TABLE 23: MICROPROCESSOR REGISTER #5 BIT DESCRIPTION

REGISTER ADDRESS 00101		FUNCTION	REGISTER TYPE	RESET VALUE
BIT #	NAME			
D7	Reserved		RO	0
D6	DMO	**Driver Monitor Output:** This bit is set to a "1" to indicate transmit driver failure is detected. The value of this bit is based on the current status of DMO. If the DMOIE bit is enabled, any transition on this bit will generate an Interrupt.	RO	0
D5	FLS	**FiFO Limit Status:** This bit is set to a "1" to indicate that the jitter attenuator read/write FIFO pointers are within +/- 3 bits. If the FLSIE bit is enabled, any transition on this bit will generate an Interrupt.	RO	0
D4	LCV	**Line Code Violation:** This bit is set to a "1" to indicate that the receiver is currently detecting a Line Code Violation or an excessive number of zeros in the B8ZS or HDB3 modes. If the LCVIE bit is enabled, any transition on this bit will generate an Interrupt.	RO	0

The product (or products) mentioned in this data sheet are no longer being manufactured and may not be ordered (OBS)

TABLE 23: MICROPROCESSOR REGISTER #5 BIT DESCRIPTION

D3	NLCD	**Network Loop-Code Detection:** This bit operates differently in the Manual or the Automatic Network Loop-Code detection modes. In the Manual Loop-Code detection mode (NLCDE1 =”0” and NLCDE0 =”1”, or NLCDE1 =”1” and NLCDE0 =”0”) this bit gets set to “1” as soon as the Loop-Up (“00001”) or Loop-Down (“001”) code is detected in the receive data for longer than 5 seconds. The NLCD bit stays in the “1” state for as long as the chip detects the presence of the Loop-Code in the receive data and it is reset to “0” as soon as it stops receiving it. In this mode if the NLCD interrupt is enabled the chip will initiate an interrupt on every transition of the NLCD. When the Automatic Loop-Code detection mode (NLCDE1 =”1” and NLCDE0 =”1”) is initiated, the state of the NLCD interface bit is reset to “0” and the chip is programmed to monitor the receive input data for the Loop-Up Code. This bit is set to a “1” to indicate that the Network Loop Code is detected for more than 5 seconds. Simultaneously the Remote Loop-Back condition is automatically activated and the chip is programmed to monitor the receive data for the Network Loop-Down Code. The NLCD bit stays in the “1” state for as long as the Remote Loop-Back condition is in effect even if the chip stops receiving the Loop-Up Code. Remote Loop-Back is removed if the chip detects the “001” pattern for longer than 5 seconds in the receive data. Detecting the “001” pattern also results in resetting the NLCD interface bit and initiating an interrupt provided the NLCD interrupt enable bit it active. When programmed in the Automatic detection mode, the NLCD interface bit stays “High” for the entire time the Remote Loop-Back is active and initiates an interrupt anytime the status of the NLCD bit changes. In this mode the host can monitor the state of the NLCD bit to determine if the Remote Loop-Back is activated.	RO	0
D2	AISD	**Alarm Indication Signal Detect:** This bit is set to a "1" to indicate All Ones Signal is detected by the receiver. The value of this bit is based on the current status of Alarm Indication Signal detector. If the AISDIE bit is enabled, any transition on this bit will generate an Interrupt.	RO	0
D1	RLOS	**Receive Loss of Signal:** This bit is set to a "1" to indicate that the receive input signal is lost. The value of this bit is based on the current status of the receive input signal. If the RLOSIE bit is enabled, any transition on this bit will generate an Interrupt.	RO	0
D0	QRPD	**Quasi-random Pattern Detection:** This bit is set to a "1" to indicate the receiver is currently in synchronization with QRSS pattern. The value of this bit is based on the current status of Quasi-random pattern detector of. If the QRPDIE bit is enabled, any transition on this bit will generate an Interrupt.	RO	0

The product (or products) mentioned in this data sheet are no longer being manufactured and may not be ordered (OBS)

TABLE 24: MICROPROCESSOR REGISTER #6 BIT DESCRIPTION

REGISTER ADDRESS 00110		FUNCTION	REGISTER TYPE	RESET VALUE
BIT #	NAME			
D7	Reserved		RUR	0
D6	DMOIS	**Driver Monitor Output Interrupt Status:** This bit is set to a "1" every time when DMO status has changed since last read.	RUR	0
D5	FLSIS	**FIFO Limit Interrupt Status:** This bit is set to a "1" every time when FIFO Limit (Read/Write pointer with +/- 3 bits apart) status has changed since last read.	RUR	0
D4	LCVIS	**Line Code Violation Interrupt Status:** This bit is set to a "1" every time when LCV status has changed since last read.	RUR	0
D3	NLCDIS	**Network Loop-Code Detection Interrupt Status:** This bit is set to a "1" every time when NLCD status has changed since last read.	RUR	0
D2	AISDIS	**AIS Detection Interrupt Status:** This bit is set to a "1" every time when AISD status has changed since last read.	RUR	0
D1	RLOSIS	**Receive Loss of Signal Interrupt Status:** This bit is set to a "1" every time RLOS status has changed since last read.	RUR	0
D0	QRPDIS	**Quasi-Random Pattern Detection Interrupt Status:** This bit is set to a "1" every time when QRPD status has changed since last read.	RUR	0

The product (or products) mentioned in this data sheet are no longer being manufactured and may not be ordered (OBS)

TABLE 25: MICROPROCESSOR REGISTER #7 BIT DESCRIPTION

REGISTER ADDRESS 00111		FUNCTION	REGISTER TYPE	RESET VALUE
BIT #	NAME			
D7	Reserved		RO	0
D6	Reserved		RO	0
D5	CLOS5	**Cable Loss bit 5:** CLOS[5:0] are the six bits receiver for selective equalizer setting which is also a binary word that represents the cable attenuation indication within ±1dB. CLOS5 is the most significant bit (MSB) and CLOS0 is the least significant bit (LSB).	RO	0
D4	CLOS4	**Cable Loss bit 4:** See description of D5 for function of this bit.	RO	0
D3	CLOS3	**Cable Loss bit 3:** See description of D5 for function of this bit.	RO	0
D2	CLOS2	**Cable Loss bit 2:** See description of D5 for function of this bit.	RO	0
D1	CLOS1	**Cable Loss bit 1:** See description of D5 for function of this bit.	RO	0
D0	CLOS0	**Cable Loss bit 0:** See description of D5 for function of this bit.	RO	0

TABLE 26: MICROPROCESSOR REGISTER #8 BIT DESCRIPTION

REGISTER ADDRESS 01000		FUNCTION	REGISTER TYPE	RESET VALUE
BIT #	NAME			
D7	Reserved		R/W	0
D6-D0	B6S1 - B0S1	**Arbitrary Transmit Pulse Shape, Segment 1** The shape of the transmitted pulse can be made user programmable by selecting "Arbitrary Pulse" mode, see Table 5. The arbitrary pulse is divided into eight time segments whose combined duration is equal to one period of MCLK. This 7 bit number represents the amplitude of the arbitrary pulse during the first time segment. B6S1 -B0S1 is in signed magnitude format with B6S1 as the sign bit and B0S1 as the least significant bit (LSB).	R/W	0

The product (or products) mentioned in this data sheet are no longer being manufactured and may not be ordered (OBS)

TABLE 27: MICROPROCESSOR REGISTER #9 BIT DESCRIPTION

REGISTER ADDRESS 01001		FUNCTION	REGISTER TYPE	RESET VALUE
BIT #	NAME			
D7	Reserved		R/W	0
D6-D0	B6S2 - B0S2	**Arbitrary Transmit Pulse Shape, Segment 2** The shape of the transmitted pulse can be made user programmable by selecting "Arbitrary Pulse" mode, see Table 5. The arbitrary pulse is divided into eight time segments whose combined duration is equal to one period of MCLK. This 7 bit number represents the amplitude of the arbitrary pulse during the second time segment. B6S2 -B0S2 is in signed magnitude format with B6S2 as the sign bit and B0S2 as the least significant bit (LSB).	R/W	0

TABLE 28: MICROPROCESSOR REGISTER #10 BIT DESCRIPTION

REGISTER ADDRESS 01010		FUNCTION	REGISTER TYPE	RESET VALUE
BIT #	NAME			
D7	Reserved		R/W	0
D6-D0	B6S3 - B0S3	**Arbitrary Transmit Pulse Shape, Segment 3** The shape of the transmitted pulse can be made user programmable by selecting "Arbitrary Pulse" mode, see Table 5. The arbitrary pulse is divided into eight time segments whose combined duration is equal to one period of MCLK. This 7 bit number represents the amplitude of the arbitrary pulse during the thrd time segment. B6S3 -B0S3 is in signed magnitude format with B6S3 as the sign bit and B0S3 as the least significant bit (LSB).	R/W	0

The product (or products) mentioned in this data sheet are no longer being manufactured and may not be ordered (OBS)

TABLE 29: MICROPROCESSOR REGISTER #11 BIT DESCRIPTION

REGISTER ADDRESS 01011		FUNCTION	REGISTER TYPE	RESET VALUE
BIT #	NAME			
D7	Reserved		R/W	0
D6-D0	B6S4 - B0S4	**Arbitrary Transmit Pulse Shape, Segment 4** The shape of the transmitted pulse can be made user programmable by selecting "Arbitrary Pulse" mode, see Table 5. The arbitrary pulse is divided into eight time segments whose combined duration is equal to one period of MCLK. This 7 bit number represents the amplitude of the arbitrary pulse during the fourth time segment. B6S4 -B0S4 is in signed magnitude format with B6S4 as the sign bit and B0S4 as the least significant bit (LSB).	R/W	0

TABLE 30: MICROPROCESSOR REGISTER #12 BIT DESCRIPTION

REGISTER ADDRESS 01100		FUNCTION	REGISTER TYPE	RESET VALUE
BIT #	NAME			
D7	Reserved		R/W	0
D6-D0	B6S5 - B0S5	**Arbitrary Transmit Pulse Shape, Segment 5** The shape of the transmitted pulse can be made user programmable by selecting "Arbitrary Pulse" mode, see Table 5. The arbitrary pulse is divided into eight time segments whose combined duration is equal to one period of MCLK. This 7 bit number represents the amplitude of the arbitrary pulse during the fith time segment. B6S5 -B0S5 is in signed magnitude format with B6S5 as the sign bit and B0S5 as the least significant bit (LSB).	R/W	0

The product (or products) mentioned in this data sheet are no longer being manufactured and may not be ordered (OBS)

TABLE 31: MICROPROCESSOR REGISTER #13 BIT DESCRIPTION

REGISTER ADDRESS 01101		FUNCTION	REGISTER TYPE	RESET VALUE
BIT #	NAME			
D7	Reserved		R/W	0
D6-D0	B6S6 - B0S6	**Arbitrary Transmit Pulse Shape, Segment 6** The shape of the transmitted pulse can be made user programmable by selecting "Arbitrary Pulse" mode, see Table 5. The arbitrary pulse is divided into eight time segments whose combined duration is equal to one period of MCLK. This 7 bit number represents the amplitude of the arbitrary pulse during the sixth time segment. B6S6 -B0S6 is in signed magnitude format with B6S6 as the sign bit and B0S6 as the least significant bit (LSB).	R/W	0

TABLE 32: MICROPROCESSOR REGISTER #14 BIT DESCRIPTION

REGISTER ADDRESS 01110		FUNCTION	REGISTER TYPE	RESET VALUE
BIT #	NAME			
D7	Reserved		R/W	0
D6-D0	B6S7 - B0S7	**Arbitrary Transmit Pulse Shape, Segment 7** The shape of the transmitted pulse can be made user programmable by selecting "Arbitrary Pulse" mode, see Table 5. The arbitrary pulse is divided into eight time segments whose combined duration is equal to one period of MCLK. This 7 bit number represents the amplitude of the arbitrary pulse during the seventh time segment. B6S7 -B0S7 is in signed magnitude format with B6S7 as the sign bit and B0S7 as the least significant bit (LSB).	R/W	0

The product (or products) mentioned in this data sheet are no longer being manufactured and may not be ordered (OBS)

TABLE 33: MICROPROCESSOR REGISTER #15 BIT DESCRIPTION

REGISTER ADDRESS 01111		FUNCTION	REGISTER TYPE	RESET VALUE
BIT #	NAME			
D7	Reserved		R/W	0
D6-D0	B6S8 - B0S8	**Arbitrary Transmit Pulse Shape, Segment 8** The shape of the transmitted pulse can be made user programmable by selecting "Arbitrary Pulse" mode, see Table 5. The arbitrary pulse is divided into eight time segments whose combined duration is equal to one period of MCLK. This 7 bit number represents the amplitude of the arbitrary pulse during the eighth time segment. B6S8 -B0S8 is in signed magnitude format with B6S8 as the sign bit and B0S8 as the least significant bit (LSB).	R/W	0

The product (or products) mentioned in this data sheet are no longer being manufactured and may not be ordered (OBS)

TABLE 34: MICROPROCESSOR REGISTER #16 BIT DESCRIPTION

REGISTER ADDRESS 10000 BIT #	NAME	FUNCTION	REGISTER TYPE	RESET VALUE
D7	SR/$\overline{DR}$	**Single-rail/Dual-rail Select:** Writing a "1" to this bit configures the XRT83L30 to operate in the Single-rail mode. Writing a "0" configures the XRT83L30 to operate in Dual-rail mode.	R/W	0
D6	ATAOS	**Automatic Transmit All Ones Upon RLOS:** Writing a "1" to this bit enables the automatic transmission of All Ones data to the line. Writing a "0" disables this feature.	R/W	0
D5	RCLKE	**Receive Clock Edge:** Writing a "1" to this bit selects receive output data to be updated on the negative edge of RCLK. Writing a "0" selects data to be updated on the positive edge of RCLK.	R/W	0
D4	TCLKE	**Transmit Clock Edge:** Writing a "0" to this bit selects transmit data at TPOS/TDATA and TNEG to be sampled on the falling edge of TCLK. Writing a "1" selects the rising edge of the TCLK for sampling.	R/W	0
D3	DATAP	**DATA Polarity:** Writing a "0" to this bit selects transmit input and receive output data of the XRT83L30 to be active "High". Writing a "1" selects an active "Low" state.	R/W	0
D2	Reserved		R/W	0
D1	Reserved		R/W	0
D0	SRESET	**Software Reset µP Registers:** Writing a "1" to this bit longer than 10µs resets all internal state machines	R/W	0

The product (or products) mentioned in this data sheet are no longer being manufactured and may not be ordered (OBS)

TABLE 35: MICROPROCESSOR REGISTER #17 BIT DESCRIPTION

REGISTER ADDRESS 10001 BIT #	NAME	FUNCTION	REGISTER TYPE	RESET VALUE
D7	Reserved		R/W	0
D6	CLKSEL2	**Clock Select Inputs for Master Clock Synthesizer bit 2**: In **Host** mode, CLKSEL[2:0] are input signals to a programmable frequency synthesizer that can be used to generate a master clock from an external accurate clock source according to the following table:	R/W	0
D5	CLKSEL1	**Clock Select inputs for Master Clock Synthesizer bit 1:** See description of bit D6 for function of this bit.	R/W	0
D4	CLKSEL0	**Clock Select inputs for Master Clock Synthesizer bit 0:** See description of bit D6 for function of this bit.	R/W	0

MCLKE1 kHz	MCLKT1 kHz	CLKSEL2	CLKSEL1	CLKSEL0	MCLKRATE	CLKOUT kHz
2048	2048	0	0	0	0	2048
2048	2048	0	0	0	1	1544
2048	1544	0	0	0	0	2048
1544	1544	0	0	1	1	1544
1544	1544	0	0	1	0	2048
2048	1544	0	0	1	1	1544
8	X	0	1	0	0	2048
8	X	0	1	0	1	1544
16	X	0	1	1	0	2048
16	X	0	1	1	1	1544
56	X	1	0	0	0	2048
56	X	1	0	0	1	1544
64	X	1	0	1	0	2048
64	X	1	0	1	1	1544
128	X	1	1	0	0	2048
128	X	1	1	0	1	1544
256	X	1	1	1	0	2048
256	X	1	1	1	1	1544

In **Hardware** mode the state of these bits are ignored and the master frequency PLL is controlled by the corresponding **Hardware** pins.

The product (or products) mentioned in this data sheet are no longer being manufactured and may not be ordered (OBS)

TABLE 35: MICROPROCESSOR REGISTER #17 BIT DESCRIPTION

D3	MCLKRATE	**Master Clock Rate Select:** The state of this bit programs the Master Clock Synthesizer to generate the T1/J1 or E1 clock. The Master Clock Synthesizer will generate the E1 clock when MCLKRATE = “0”, and the T1/J1 clock when MCLKRATE = “1”.	R/W	0
D2	RXMUTE	**Receive Output Mute:** Writing a "1" to this bit, mutes receive outputs at RPOS/RDATA and RNEG/LCV pins to a "0" state. ***NOTE:*** *RCLK is not muted.*	R/W	0
D1	EXLOS	**Extended LOS:** Writing a "1" to this bit extends the number of zeros at the receive input before RLOS is declared to 4096 bits. Writing a "0" reverts to the normal mode (175+75 bits for T1 and 32 bits for E1).	R/W	0
D0	ICT	**In-Circuit-Testing:** Writing a "1" to this bit configures all the output pins of the chip in "High" impedance mode for In-Circuit-Testing. Setting ICT bit to “1” is equivalent to connecting the **Hardware** ICT pin to ground.	R/W	0

The product (or products) mentioned in this data sheet are no longer being manufactured and may not be ordered (OBS)

TABLE 36: MICROPROCESSOR REGISTER #18 BIT DESCRIPTION

REGISTER ADDRESS 10010 BIT #	NAME	FUNCTION	REGISTER TYPE	RESET VALUE
D7	GAUGE1	**Wire Gauge Selector Bit 1** This bit along with bit D6 are used to select wire gauge size as shown in the table below. GAUGE1 / GAUGE0 / Wire Size 0 / 0 / 22 and 24 Gauge 0 / 1 / 22 Gauge 1 / 0 / 24 Gauge 1 / 1 / 26 Gauge	R/W	0
D6	GAUGE0	**Wire Gauge Selector Bit 0** See bit D7.	R/W	0
D5	TXONCNTL	**Transmit On Control.** In **Host** mode, setting this bit to “1” transfers the control of the Transmit On/Off function to the TXON **Hardware** control pin. ***NOTE:*** *This provides a faster On/Off capability for redundancy application.*	R/W	0
D4	TERCNTL	**Termination Control:** In **Host** mode, setting this bit to “1” transfers the control of the RXTSEL to the RXTSEL **Hardware** control pin. ***NOTE:*** *This provides a faster On/Off capability for redundancy application.*	R/W	0

TABLE 36: MICROPROCESSOR REGISTER #18 BIT DESCRIPTION

<table>
<tr><td>D3</td><td>SL_1</td><td>Slicer Level Control bit 1: This bit and bit D2 control the slicing level for the slicer per the following table.
<table>
<tr><th>SL_1</th><th>SL_0</th><th>Slicer Mode</th></tr>
<tr><td>0</td><td>0</td><td>Normal</td></tr>
<tr><td>0</td><td>1</td><td>Decrease by 5% from Normal</td></tr>
<tr><td>1</td><td>0</td><td>Increase by 5% from Normal</td></tr>
<tr><td>1</td><td>1</td><td>Normal</td></tr>
</table></td><td>R/W</td><td>0</td></tr>
<tr><td>D2</td><td>SL_0</td><td>Slicer Level Control bit 0: See description bit D3.</td><td>R/W</td><td>0</td></tr>
<tr><td>D1</td><td>EQG_1</td><td>Equalizer Gain Control bit 1: This bit together with bit D0 control the gain of the equalizer as shown in the table below.
<table>
<tr><th>EQG_1</th><th>EQG_0</th><th>Equalizer Gain</th></tr>
<tr><td>0</td><td>0</td><td>Normal</td></tr>
<tr><td>0</td><td>1</td><td>Reduce Gain by 1 dB</td></tr>
<tr><td>1</td><td>0</td><td>Reduce Gain by 3 dB</td></tr>
<tr><td>1</td><td>1</td><td>Normal</td></tr>
</table></td><td>R/W</td><td>0</td></tr>
<tr><td>D0</td><td>EQG_0</td><td>Equalizer Gain Control bit 0: See description of bit D1.</td><td>R/W</td><td>0</td></tr>
</table>

The product (or products) mentioned in this data sheet are no longer being manufactured and may not be ordered (OBS)

ELECTRICAL CHARACTERISTICS

TABLE 37: ABSOLUTE MAXIMUM RATINGS

Storage Temperature.....-65°C to +150°C
Operating Temperature..... -40°C to +85°C
Supply Voltage.....-0.5V to +3.8V
Vin.....-0.5 to +5.5V

TABLE 38: DC DIGITAL INPUT AND OUTPUT ELECTRICAL CHARACTERISTICS

VDD=3.3V±5%, TA=25°C, UNLESS OTHERWISE SPECIFIED					
PARAMETER	SYMBOL	MIN	TYP	MAX	UNITS
Power Supply Voltage	VDD	3.13	3.3	3.46	V
Input High Voltage	V_{IH}	2.0	-	5.0	V
Input Low Voltage	V_{IL}	-0.5	-	0.8	V
Output High Voltage @ IOH = 2.0mA	V_{OH}	2.4	-	-	V
Output Low Voltage @IOL = 2.0mA	V_{OL}	-	-	0.4	V
Input Leakage Current (except Input pins with Pull-up or Pull- down resistor).	I_L	-	-	±10	µA
Input Capacitance	C_I	-	5.0	-	pF
Output Load Capacitance	C_L	-	-	25	pF

The product (or products) mentioned in this data sheet are no longer being manufactured and may not be ordered (OBS)

TABLE 39: XRT83L30 POWER CONSUMPTION

VDD=3.3V±5%, TA=25°C, INTERNAL IMPEDANCE, UNLESS OTHERWISE SPECIFIED									
MODE	SUPPLY VOLTAGE	IMPEDANCE	TERMINATION RESISTOR	TRANSFORMER RATIO		TYP	MAX	UNIT	TEST CONDITIONS
				RECEIVER	TRANSMITTER				
E1	3.3V	75Ω	Internal	1:1	1:2	298	350	mW	100% “1’s”
E1	3.3V	120Ω	Internal	1:1	1:2	276	325	mW	100% “1’s”
T1	3.3V	100Ω	Internal	1:1	1:2	310	365	mW	100% “1’s”
---	3.3V	---	External	---	---	72	85	mW	All transmitters off

TABLE 40: E1 RECEIVER ELECTRICAL CHARACTERISTICS

VDD=3.3V±5%, TA= -40° TO 85°C, UNLESS OTHERWISE SPECIFIED					
PARAMETER	**MIN**	**TYP**	**MAX**	**UNIT**	**TEST CONDITIONS**
Receiver loss of signal:					
Number of consecutive zeros before RLOS is set	10	175	255		Cable attenuation @1024KHz
Input signal level at RLOS	15	20		dB	ITU-G.775, ETSI 300 233
RLOS De-asserted	12.5			dB	
Receiver Sensitivity (Short Haul with cable loss)	11			dB	With nominal pulse amplitude of 3.0V for 120Ω and 2.37V for 75Ω application. With -18dB interference signal added.
Receiver Sensitivity (Long Haul with cable loss)				dB	With nominal pulse amplitude of 3.0V for 120Ω and 2.37V for 75Ω application. With -18dB interference signal added.
Nominal	0		36		
Extended	0		43		
Input Impedance		13		kΩ	
Input Jitter Tolerance:					
1 Hz	>64			UIpp	ITU G.823
10kHz-100kHz	0.4			UIpp	
Recovered Clock Jitter					
Transfer Corner Frequency		20		kHz	ITU G.736
Peaking Amplitude			0.5	dB	
Jitter Attenuator Corner Frequency (-3dB curve) (JABW=0)	-	10	-	Hz	ITU G.736
(JABW=1)		1.5		Hz	
Return Loss:					
51kHz - 102kHz	14	-	-	dB	ITU-G.703
102kHz - 2048kHz	20			dB	
2048kHz - 3072kHz	16			dB	

The product (or products) mentioned in this data sheet are no longer being manufactured and may not be ordered (OBS)

TABLE 41: T1 RECEIVER ELECTRICAL CHARACTERISTICS

VDD=3.3V±5%, TA= -40° TO 85°C, UNLESS OTHERWISE SPECIFIED					
PARAMETER	**MIN**	**TYP**	**MAX**	**UNIT**	**TEST CONDITIONS**
Receiver loss of signal:					
Number of consecutive zeros before RLOS is set	100	175	250		Cable attenuation @772kHz
Input signal level at RLOS	15	20	-	dB	ITU-G.775, ETSI 300 233
RLOS Clear	12.5	-	-	% ones	
Receiver Sensitivity (Short Haul with cable loss)	12			dB	With nominal pulse amplitude of 3.0V for 100Ω termination
Receiver Sensitivity (Long Haul with cable loss)	0	-	36	dB dB	With nominal pulse amplitude of 3.0V for 100Ω termination
Input Impedance		13		kΩ	
Jitter Tolerance: 1Hz 10kHz - 100kHz	 138 0.4	 - -	 - -	 UIpp	AT&T Pub 62411
Recovered Clock Jitter Transfer Corner Frequency Peaking Amplitude	 - -	 9.8	 - 0.1	 kHz dB	TR-TSY-000499
Jitter Attenuator Corner Frequency (-3dB curve)	-	3		Hz	AT&T Pub 62411
Return Loss: 51kHz - 102kHz 102kHz - 2048kHz 2048kHz - 3072kHz	 - - -	 20 25 25	 - - -	 dB dB dB	

The product (or products) mentioned in this data sheet are no longer being manufactured and may not be ordered (OBS)

TABLE 42: E1 TRANSMIT RETURN LOSS REQUIREMENT

FREQUENCY	RETURN LOSS	
	G.703/CH-PTT	**ETS 300166**
51-102kHz	8dB	6dB
102-2048kHz	14dB	8dB
2048-3072kHz	10dB	8dB

TABLE 43: E1 TRANSMITTER ELECTRICAL CHARACTERISTICS

VDD=3.3V±5%, TA= -40° TO 85°C, UNLESS OTHERWISE SPECIFIED					
PARAMETER	**MIN**	**TYP**	**MAX**	**UNIT**	**TEST CONDITIONS**
AMI Output Pulse Amplitude: 75Ω Application 120Ω Application	 2.185 2.76	 2.37 3.0	 2.555 3.24	 V V	Transformer with 1:2 ratio and 9.1Ω resistor in series with each end of primary.
Output Pulse Width	224	244	264	ns	
Output Pulse Width Ratio	0.95	-	1.05	-	ITU-G.703
Output Pulse Amplitude Ratio	0.95	-	1.05	-	ITU-G.703
Jitter Added by the Transmitter Output	-	0.025	0.05	UIpp	Broad Band with jitter free TCLK applied to the input.
Output Return Loss: 51kHz -102kHz 102kHz-2048kHz 2048kHz-3072kHz	 8 14 10	 - - -	 - - -	 dB dB dB	 ETSI 300 166, CHPTT

TABLE 44: T1 TRANSMITTER ELECTRICAL CHARACTERISTICS

VDD=3.3V±5%, TA= -40° TO 85°C, UNLESS OTHERWISE SPECIFIED					
PARAMETER	**MIN**	**TYP**	**MAX**	**UNIT**	**TEST CONDITIONS**
AMI Output Pulse Amplitude:	2.5	3.0	3.5	V	Tansformer with 1:2.45 ratio and measured at DSX-1
Output Pulse Width	338	350	362	ns	ANSI T1.102
Output Pulse Width Imbalance	-	-	20	-	ANSI T1.102
Output Pulse Amplitude Imbalance	-	-	±200	mV	ANSI T1.102
Jitter Added by the Transmitter Output	-	0.025	0.05	UIpp	Broad Band with jitter free TCLK applied to the input.
Output Return Loss: 51kHz -102kHz 102kHz-2048kHz 2048kHz-3072kHz	 - - -	 15 15 15	 - - -	 dB dB dB	

The product (or products) mentioned in this data sheet are no longer being manufactured and may not be ordered (OBS)

FIGURE 26. ITU G.703 PULSE TEMPLATE

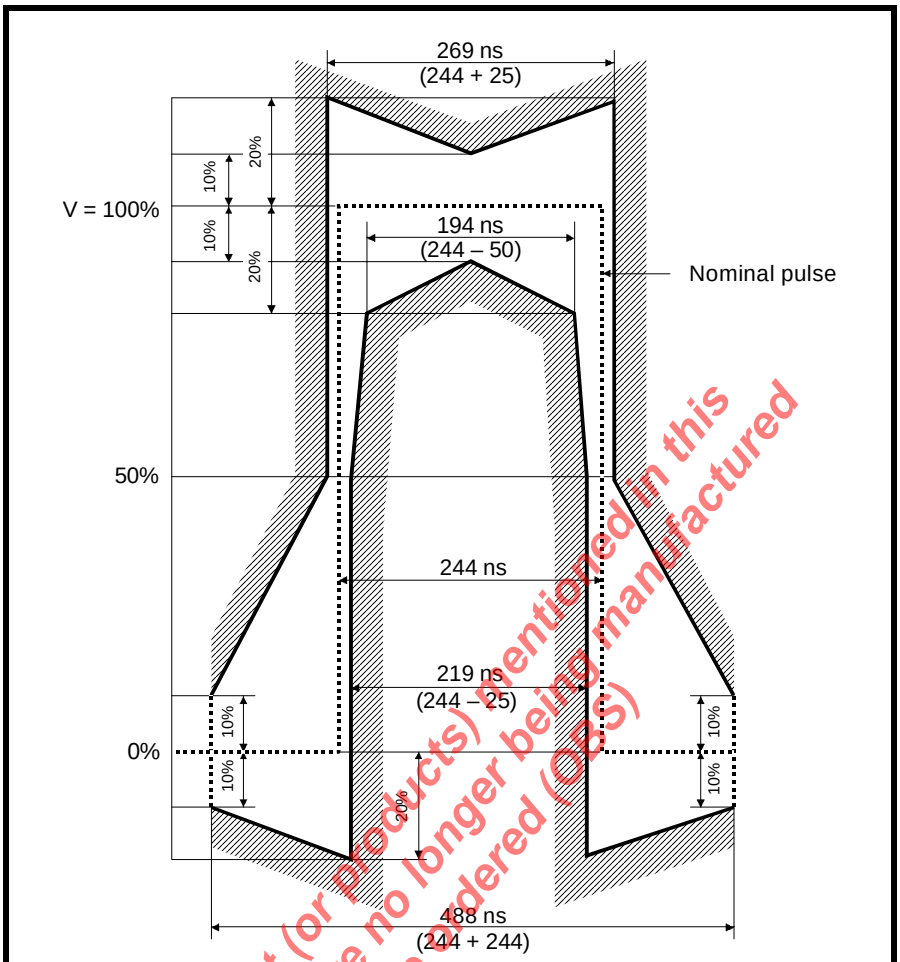

Note – V corresponds to the nominal peak value.

The product (or products) mentioned in this data sheet are no longer being manufactured and may not be ordered (OBS)

TABLE 45: TRANSMIT PULSE MASK SPECIFICATION

Test Load Impedance	75Ω Resistive (Coax)	120Ω Resistive (twisted Pair)
Nominal Peak Voltage of a Mark	2.37V	3.0V
Peak voltage of a Space (no Mark)	0 ± 0.237V	0 ± 0.3V
Nominal Pulse width	244ns	244ns
Ratio of Positive and Negative Pulses Imbalance	0.95 to 1.05	0.95 to 1.05

FIGURE 27. DSX-1 PULSE TEMPLATE (NORMALIZED AMPLITUDE)

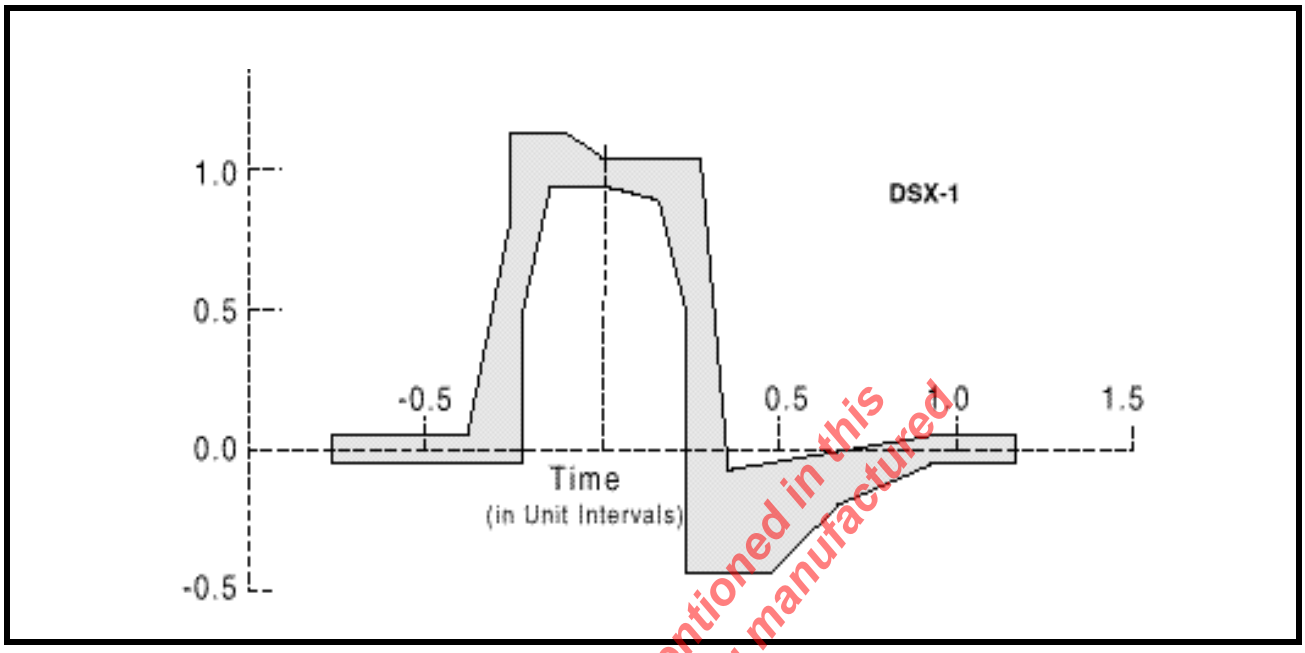

TABLE 46: DSX1 INTERFACE ISOLATED PULSE MASK AND CORNER POINTS

MINIMUM CURVE		MAXIMUM CURVE	
TIME (UI)	NORMALIZED AMPLITUDE	TIME (UI)	NORMALIZED AMPLITUDE
-0.77	-.05V	-0.77	.05V
-0.23	-.05V	-0.39	.05V
-0.23	0.5V	-0.27	.8V
-0.15	0.95V	-0.27	1.15V
0.0	0.95V	-0.12	1.15V
0.15	0.9V	0.0	1.05V
0.23	0.5V	0.27	1.05V
0.23	-0.45V	0.35	-0.07V
0.46	-0.45V	0.93	0.05V
0.66	-0.2V	1.16	0.05V
0.93	-0.05V		
1.16	-0.05V		

The product (or products) mentioned in this data sheet are no longer being manufactured and may not be ordered (OBS)

TABLE 47: AC ELECTRICAL CHARACTERISTICS

(TA=25°C, VDD=3.3V±5%, UNLESS OTHERWISE SPECIFIED)					
PARAMETER	SYMBOL	MIN	TYP	MAX	UNITS
E1 MCLK Clock Frequency		-	2.048	-	MHz
T1 MCLK Clock Frequency		-	1.544	-	MHz
MCLK Clock Duty Cycle		40	-	60	%
MCLK Clock Tolerance		-	±50	-	ppm
TCLK Duty Cycle	T_{CDU}	30	50	70	%
Transmit Data Setup Time	T_{SU}	50	-	-	ns
Transmit Data Hold Time	T_{HO}	30	-	-	ns
TCLK Rise Time(10%/90%)	T_{CLKR}	-	-	40	ns
TCLK Fall Time(90%/10%)	T_{CLKF}	-	-	40	ns
RCLK Duty Cycle	R_{CDU}	45	50	55	%
Receive Data Setup Time	R_{SU}	150	-	-	ns
Receive Data Hold Time	R_{HO}	150	-	-	ns
RCLK to Data Delay	R_{DY}	-	-	40	ns
RCLK Rise Time(10%/90%) with 25pF Loading.	$RCLK_R$	-	-	40	ns
RCLK Fall Time(90%/10%) with 25pF Loading.	$RCLK_F$			40	ns

The product (or products) mentioned in this data sheet are no longer being manufactured and may not be ordered (OBS)

FIGURE 28. TRANSMIT CLOCK AND INPUT DATA TIMING

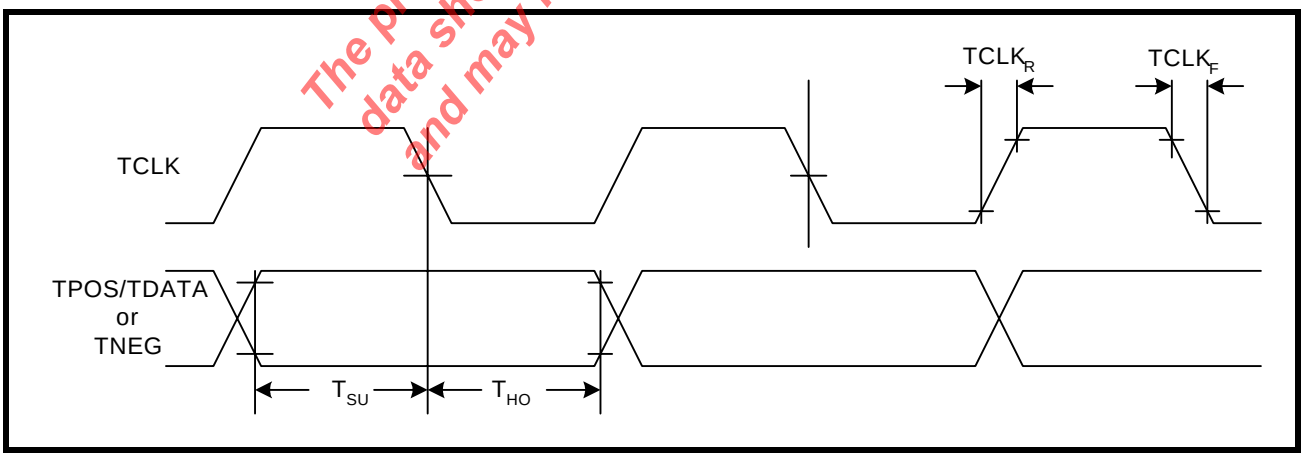

FIGURE 29. RECEIVE CLOCK AND OUTPUT DATA TIMING

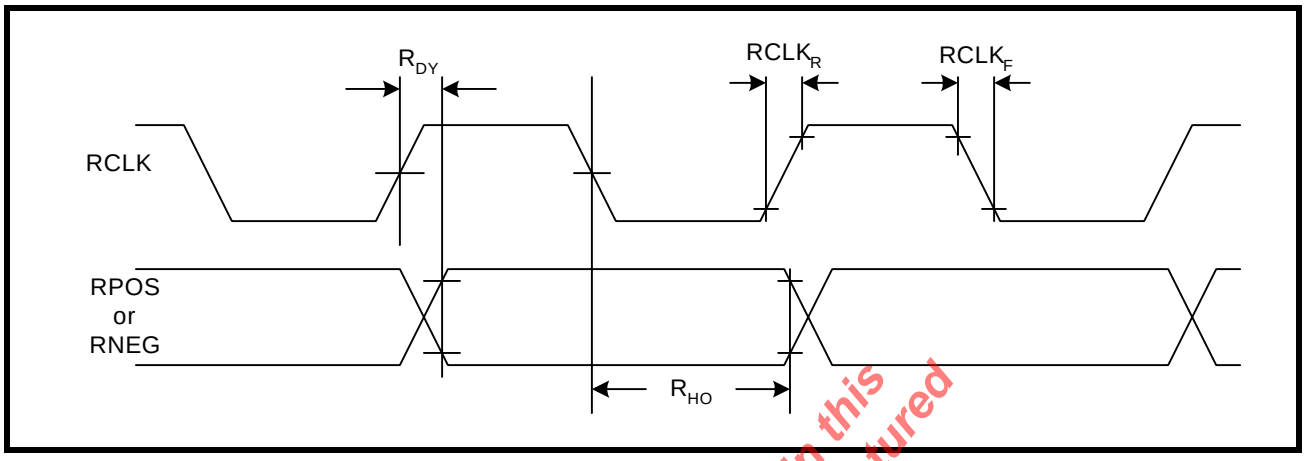

The product (or products) mentioned in this data sheet are no longer being manufactured and may not be ordered (OBS)

PACKAGE DIMENSIONS

64 LEAD THIN QUAD FLAT PACK

(10 X 10 X 1.4 MM TQFP)

REV. 3.00

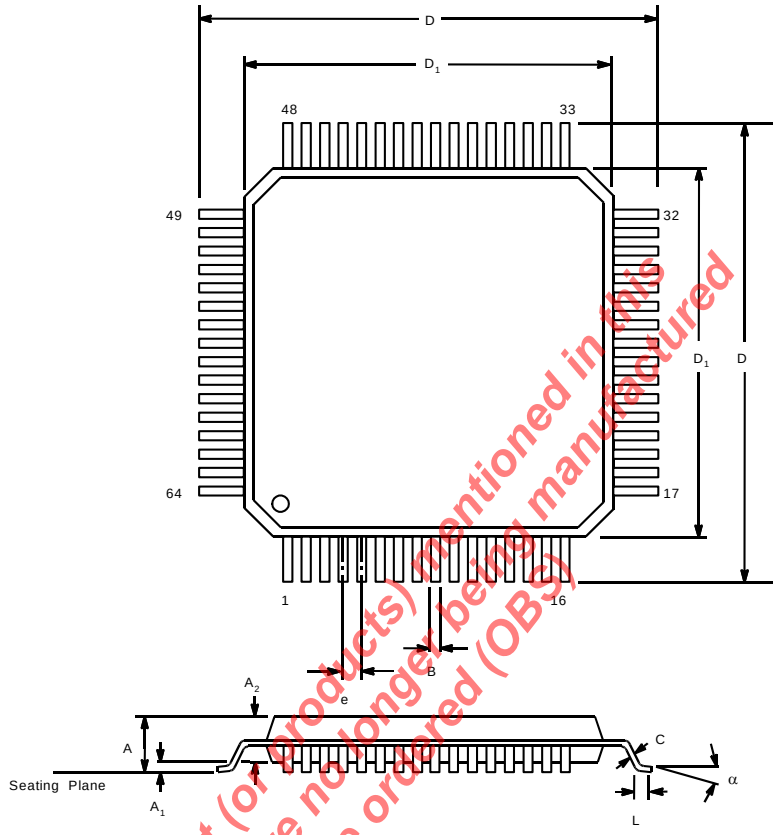

The product (or products) mentioned in this data sheet are no longer being manufactured and may not be ordered (OBS).

Note: The control dimension is the millimeter column

	INCHES		MILLIMETERS	
SYMBOL	MIN	MAX	MIN	MAX
A	0.055	0.063	1.40	1.60
A_1	0.002	0.006	0.05	0.15
A_2	0.053	0.057	1.35	1.45
B	0.007	0.011	0.17	0.27
C	0.004	0.008	0.09	0.20
D	0.465	0.480	11.80	12.20
D_1	0.390	0.398	9.90	10.10
e	0.020 BSC		0.50 BSC	
L	0.018	0.030	0.45	0.75
α	0°	7°	0°	7°

ORDERING INFORMATION

TABLE 48.

PART #	PACKAGE	OPERATING TEMPERATURE RANGE
XRT83L30IV	64 Pin TQFP	-40°C to +85°C
THERMAL INFORMATION	Theta - J_A = 38° C/W	Theta J_C = 7° C/W

REVISION HISTORY

Rev. A1.0.0 Advanced version.

Rev. P1.1.0 Preliminary release.

Rev. P1.2.0 Modified microprocessor tables, moved various functions. Added GHCI_n, SL_1, SL_0, EQG_1 EQG_0, GAUGE1 and GAUGE0 to Control Global Register 18. Separated Microprocessor description table by register number. Moved absolute maximum and DC electrical characteristics before AC electrical characteristics. Replaced TBD's in electrical ables. Reformated table of contents.

Rev. P1.2.1 Renamed FIFO pin to GAUGE, edited definition and edited defintion of JASEL[1:0] to reflect the FIFO size is selected by the jitter attenuator select.

Rev. P1.2.2 Redefined bits D3, D2 and D0 of register 1, in combination these bits set the jitter attenuator path and FIFO size.

Rev. P1.2.3 Added definitions to dual function pins in the pin description section.

Rev P1.2.4 Added JABW, JASEL1 and JASEL0 table in pin list and Jitter attenuator section. Corrected typos in features, figures 7, 8, 9 and 11. Added Jitter attenuator tables in microprocessor register tables.

Rev. P1.2.5 Table 18, 23, 24, 25 change GCHIE to GIE, GHCI and GCHIS to Reserved. Corrected package outline drawing.

Rev. P1.2.6 TERCNTL (pin 46) function removed. Bit 7 of Microprocessor Register #2 was INSBER, is now reserved. Bit 1 of Microprocessor Register #3 was INVQRSS, is now reserved. New description for bits D6 - D0 in Tables 27 - 34 Microprocessor Registers.

Rev. P1.2.7 Expanded information on Receive Redundancy. 2 tables and 1 figure.

Rev. P1.2.8 Edited section on RLOS.

Rev. P1.2.9 Removed TERCNTL from block diagram. Edit EQC[4:0] to be input only on block diagram. Corrected RXMUTE, TCLK, JABW, MCKLE1, CLKSEL [2:0], RXTSEL, TERSEL[1:0], RXRES[1:0], ATAOS, NLCD in the pin descriptions section. Replaced the Functional Description section. Edits to Table 18: Microprocessor Register Bit Map, Table 21: Microprocessor Register #2 Bit Description, Table 35: Microprocessor Register #16 Bit Description

Rev. P1.3.0 Table 35: Microprocessor Register #17 Bit Description, edit E1 clock MCLKRATE= "0" and T1/J1 clock MCLKRATE="1" .

Rev. 1.0.0 Final Release.

Rev. 1.0.1 Corrected package dimensions in ordering information table page 3.

The product (or products) mentioned in this data sheet are no longer being manufactured and may not be ordered (OBS)

NOTES

The product (or products) mentioned in this data sheet are no longer being manufactured and may not be ordered (OBS)

NOTICE

EXAR Corporation reserves the right to make changes to the products contained in this publication in order to improve design, performance or reliability. EXAR Corporation assumes no responsibility for the use of any circuits described herein, conveys no license under any patent or other right, and makes no representation that the circuits are free of patent infringement. Charts and schedules contained here in are only for illustration purposes and may vary depending upon a user's specific application. While the information in this publication has been carefully checked; no responsibility, however, is assumed for inaccuracies.

EXAR Corporation does not recommend the use of any of its products in life support applications where the failure or malfunction of the product can reasonably be expected to cause failure of the life support system or to significantly affect its safety or effectiveness. Products are not authorized for use in such applications unless EXAR Corporation receives, in writing, assurances to its satisfaction that: (a) the risk of injury or damage has been minimized; (b) the user assumes all such risks; (c) potential liability of EXAR Corporation is adequately protected under the circumstances.

Copyright 2006 EXAR Corporation

Datasheet June 2006.

Reproduction, in part or whole, without the prior written consent of EXAR Corporation is prohibited.