GENERAL DESCRIPTION

The **SP26LV432** is a quad differential line receiver with three-state outputs designed to meet the EIA specifications of the RS-422 serial protocol. The **SP26LV432** features Exar's BiCMOS process allowing low power operational characteristics of CMOS technology while meeting all of the demands of the RS-422 serial protocol at 50Mbps under load. The RS-422 protocol allows up to 10 receivers to be connected to a multipoint bus transmission line. The **SP26LV432** features a receiver enable control common to all four receivers and a high-Z output with 6mA source and sink capability. Since the cabling can be as long as 4,000 feet, the RS-422 receivers of the **SP26LV432** are equipped with a wide (-7.0V to +7.0V) common-mode input voltage range to accommodate ground potential differences.

FEATURES

- Quad Differential Line Receivers
- Compatible with the EIA standard for RS-422 serial protocol
- High-Z Output Control
- Switching Rates Up to 50Mbps
- 14ns Typical Receiver Propagation Delays
- 60mV Typical Input Hysteresis
- Single +3.3V Supply Operation
- Common Receiver Enable Control
- 26LV32 industry standard footprint compatible
- Ideal For Use with SP26LV431, Quad Drivers
- -7.0V to +7.0V Common-Mode Input Voltage range

The product (or products) mentioned in this data sheet are no longer being manufactured and may not be ordered (OBS)

FIGURE 1. TYPICAL APPLICATION CIRCUIT

ENABLE	$\overline{\text{ENABLE}}$	INPUT	OUTPUT
LOW	HIGH	don't care	High - Z
HIGH	don't care	$V_{ID} \geq V_{TH}$ (max)	HIGH
HIGH	don't care	$V_{ID} \leq V_{TH}$ (min)	LOW
don't care	LOW	$V_{ID} \geq V_{TH}$ (max)	HIGH
don't care	LOW	$V_{ID} \leq V_{TH}$ (min)	LOW
HIGH	don't care	OPEN	HIGH
don't care	LOW	OPEN	HIGH

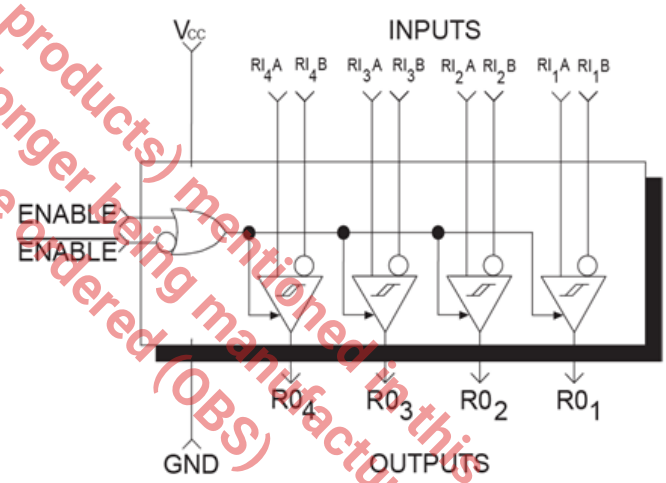

FIGURE 2. PIN OUT ASSIGNMENT

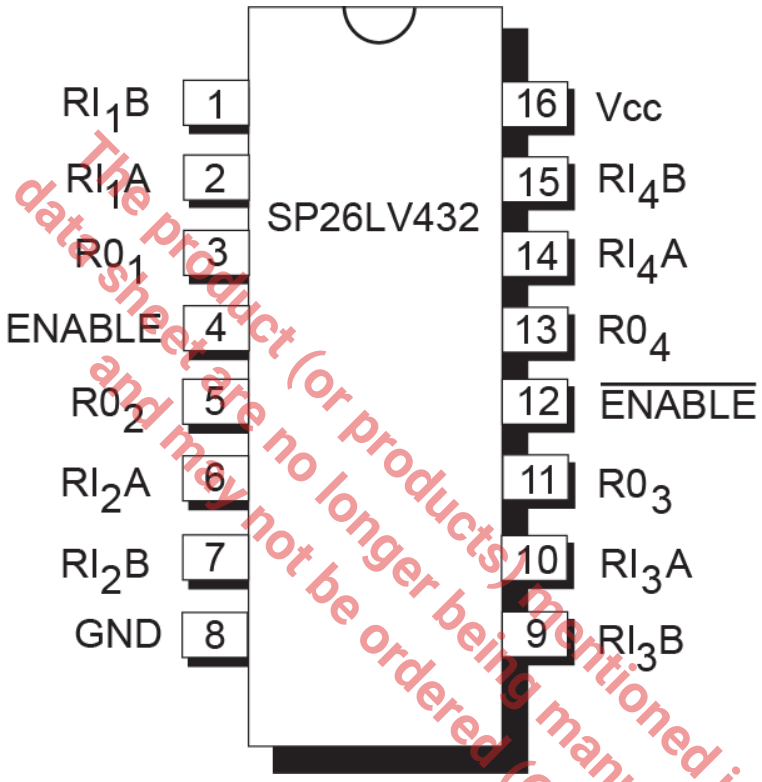

The product (or products) mentioned in this datasheet are no longer being manufactured and may not be ordered (OBS)

ORDERING INFORMATION[1]

PART NUMBER	OPERATING TEMPERATURE RANGE	PACKAGE	PACKAGING METHOD	LEAD-FREE[2]
SP26LV432CN-L	0°C to +70°C	16-pin Narrow SOIC	Tube	Yes
SP26LV432CN-L/TR	0°C to +70°C	16-pin Narrow SOIC	Tape and Reel	Yes

NOTES:

1. *Refer to www.maxlinear.com/SP26LV432 for most up-to-date Ordering Information.*
2. *Visit www.maxlinear.com for additional information on Environmental Rating.*

PIN DESCRIPTIONS

Pin Assignments

PIN NUMBER	PIN NAME	TYPE	DESCRIPTION
1	RI_1B	I	Inverted RS-422 receiver input.
2	R_1A	I	Non-inverted RS-422 Receiver input.
3	RO_1	O	TTL receiver output.
4	ENABLE	I	Receiver input enable, active HIGH.
5	RO_2	O	TTL receiver output.
6	RI_2A	I	Non-inverted RS-422 Receiver input.
7	RI_2B	I	Inverted RS-422 receiver input.
8	GND	Pwr	Ground.
9	RI_3B	I	Inverted RS-422 receiver input.
10	RI_3A	I	Non-inverted RS-422 Receiver input.
11	RO_3	O	TTL receiver output.
12	$\overline{ENABLE}$	I	Receiver input enable, active LOW.
13	RO_4	O	TTL receiver output.
14	RI_4A	I	Non-inverted RS-422 Receiver input.
15	RI_4B	I	Inverted RS-422 receiver input.
16	V_{CC}	Pwr	+3.0V to +3.6V power supply.

Pin type: I=Input, O=Output.

The product (or products) mentioned in this data sheet are no longer being manufactured and may not be ordered (OBS)

ABSOLUTE MAXIMUM RATINGS

These are stress ratings only and functional operation of the device at these ratings or any other above those indicated in the operation sections to the specifications below is not implied. Exposure to absolute maximum rating conditions for extended periods of time may affect reliability and cause permanent damage to the device.

V_{CC} (Supply Voltage)	7.0V
V_{CM} (Common Mode Range)	±14V
V_{DIFF} (Differential Input Voltage)	±14V
V_{IN} (Enable Input Voltage)	Vcc + 1.5V
T_{STG} (Storage Temperature Range)	-65°C to +150°C
I_O (Maximum Current Per Output)	±25mA
Storage Temperature Range	-65°C to + 150°C
Power Dissipation 16-pin PDIP (derate 14.3mW/°C above +70°C)	1150mW
Power Dissipation 16-pin NSOIC (derate 8.95mW/°C above +70°C)	725mW

CAUTION:

ESD (Electrostatic Discharge) sensitive device. Permanent damage may occur on unconnected devices subject to high energy electrostatic fields. Unused devices must be stored in conductive foam or shunts. Personnel should be properly grounded prior to handling this device. The protective foam should be discharged to the destination socket before devices are removed.

The product (or products) mentioned in this data sheet are no longer being manufactured and may not be ordered (OBS)

ELECTRICAL CHARACTERISTICS

UNLESS OTHERWISE NOTED: THE FOLLOWING SPECIFICATIONS APPLY FOR VCC = +3.0V TO +3.6V WITH TA = +25°C AND ALL MIN AND MAX LIMITS APPLY ACROSS THE RECOMMENDED OPERATING TEMPERATURE RANGE.

SYMBOL	PARAMETERS	MIN.	TYP.	MAX.	UNITS	CONDITIONS
V_{CC}	Supply Voltage	3.0		3.6	V	
	Enable Input Rise or Fall Times		3		ns	
Input Electrical Characteristics						
V_{TH}	Minimum Differential Input Voltage	-200	50	+200	mV	$V_{OUT} = V_{OH}$ or V_{OL}, $-7V < V_{CM} < +7V$
R_{IN}	Input Resistance	5.0			kΩ	V_{IN} = -7V, +7V, +10V Other input = GND
I_{IN}	Input Current		+1.25	+1.5	mA	V_{IN} = +10V, Other input = GND
I_{IN}	Input Current		-1.5V	-2.5V	mA	V_{IN} = -10V, Other input = GND
$V_{IH(EN)}$	Minimum Enable HIGH Input Level Voltage	2.0			V	
$V_{IL(EN)}$	Maximum Enable LOW Input Level Voltage			0.8	V	
I_{EN}	Maximum Enable Input Current		±1.0		µA	$V_{IN} = V_{CC}$ or GND
V_{HYST}	Input Hysteresis		60		mV	V_{CM} = 0V
I_{CC}	Quiescent Supply Current		5	15	mA	V_{CC} = +3.3V, V_{DIFF} = +1V

UNLESS OTHERWISE NOTED: THE FOLLOWING SPECIFICATIONS APPLY FOR VCC = +3.0V TO +3.6V WITH TA = +25°C AND ALL MIN AND MAX LIMITS APPLY ACROSS THE RECOMMENDED OPERATING TEMPERATURE RANGE.

SYMBOL	PARAMETERS	MIN.	TYP.	MAX.	UNITS	CONDITIONS
Output Electrical Characteristics						
V_{OH}	Minimum HIGH Level Output Voltage	2.4	2.8		V	V_{CC} = +3.0V, V_{DIFF} = +1V, I_{OUT} = -6mA
V_{OL}	Maximum LOW Level Output Voltage		0.2	0.5	V	V_{CC} = +3.0V, V_{DIFF} = -1V, I_{OUT} = +6mA
I_{OZQ}	Maximum Tri-State Output Leakage Current		±0.5	±5.0	µA	V_{OUT} = V_{CC} or GND, ENABLE = V_{IL} , $\overline{ENABLE}$ = V_{IH}
Switching Characteristics						
t_{PLH}, t_{PHL}	Propagation Delays		14	35	ns	C_L = 50pF, V_{DIFF} = 2.5V, V_{CM} = 0V, V_{CC} = +3.3V
t_{RISE}, t_{FALL}	Output Rise and Fall Times		5	10	ns	C_L = 50pF, V_{DIFF} = 2.5V, V_{CM} = 0V, V_{CC} = +3.3V
t_{PZH}, t_{PZL}	Output Enable Time			40	ns	C_L = 50pF, R_L = 1000Ω, V_{DIFF} = 2.5V, V_{CC} = +3.3V
t_{PHZ}, t_{PLZ}	Output Disable Time			40	ns	C_L = 50pF, R_L = 1000Ω, V_{DIFF} = 2.5V, V_{CC} = +3.3V

The product (or products) mentioned in this data sheet are no longer being manufactured and may not be ordered (OBS)

FIGURE 3. SP26LV432 BLOCK DIAGRAM

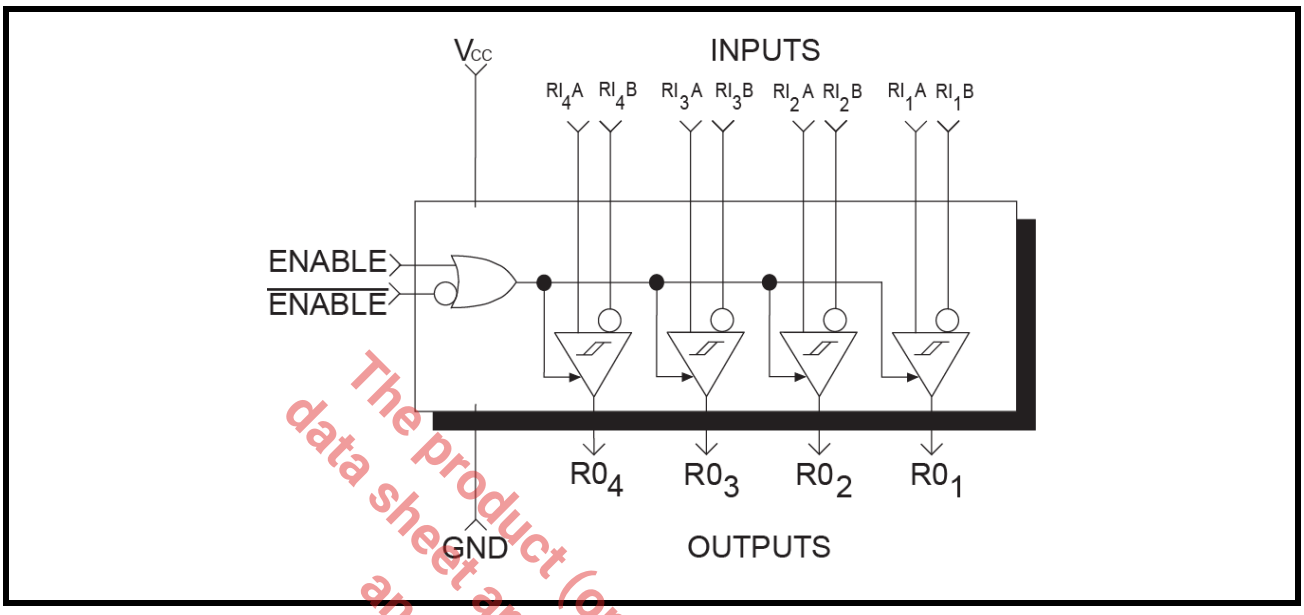

FIGURE 4. PROPAGATION DELAY

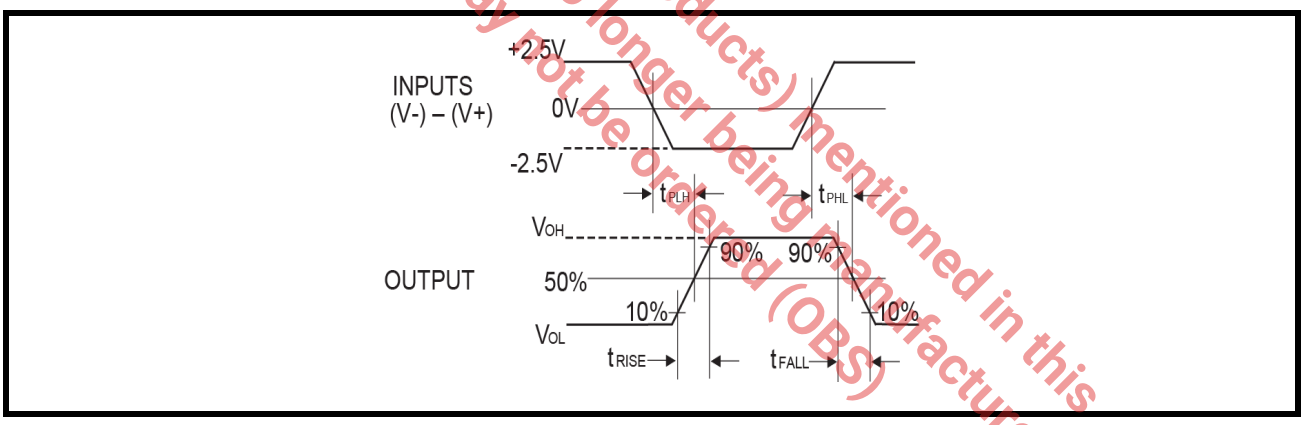

The product (or products) mentioned in this data sheet are no longer being manufactured and may not be ordered (OBS)

FIGURE 5. TEST CIRCUIT FOR HIGH-Z OUTPUT TIMING

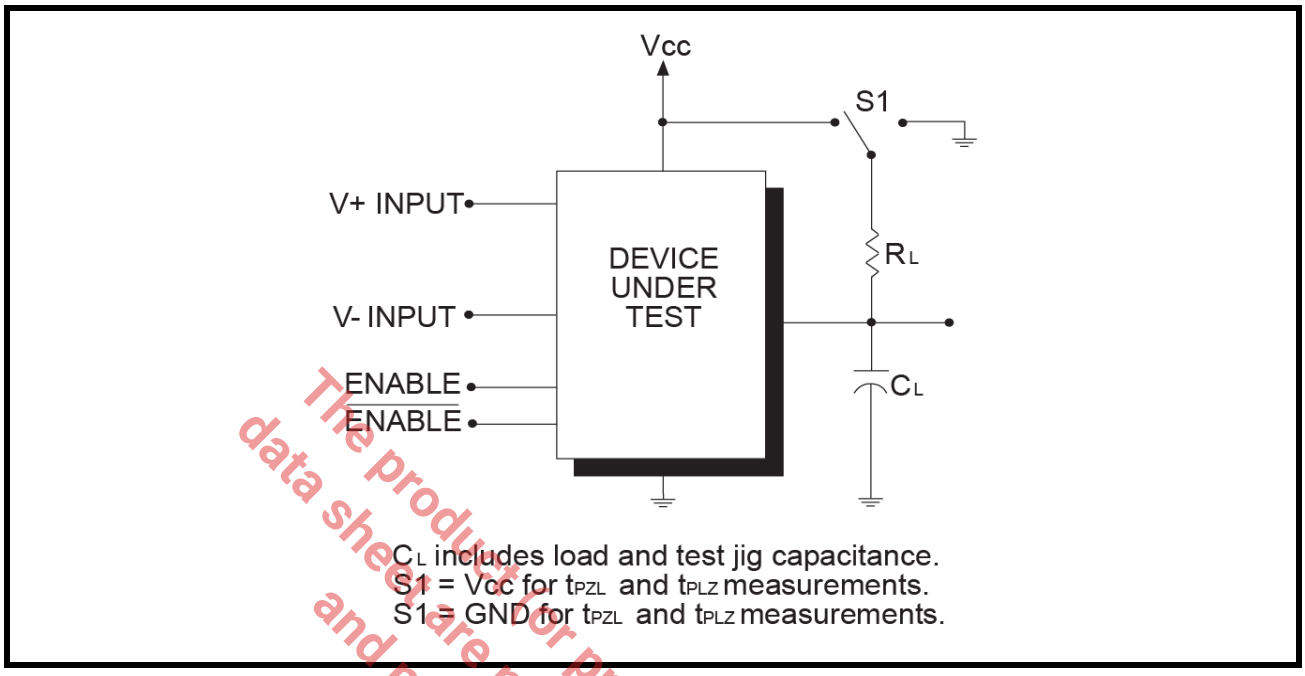

FIGURE 6. HIGH IMPEDANCE OUTPUT ENABLE AND DISABLE WAVEFORMS

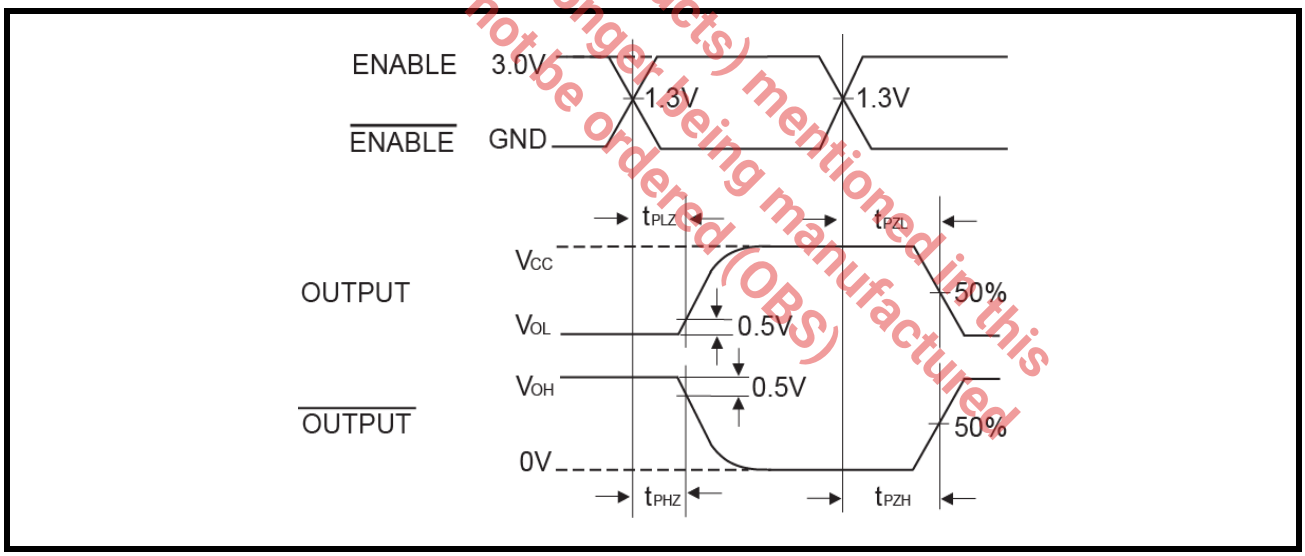

The product(s) mentioned in this data sheet are no longer being manufactured and may not be ordered (OBS)

FIGURE 7. DIFFERENTIAL PROPAGATION DELAY VS TEMPERATURE

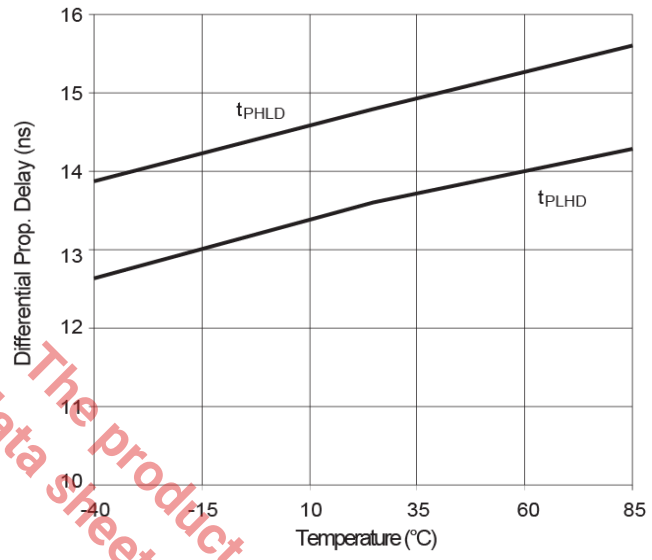

FIGURE 8. DIFFERENTIAL PROPAGATION DELAY VS SUPPLY VOLTAGE

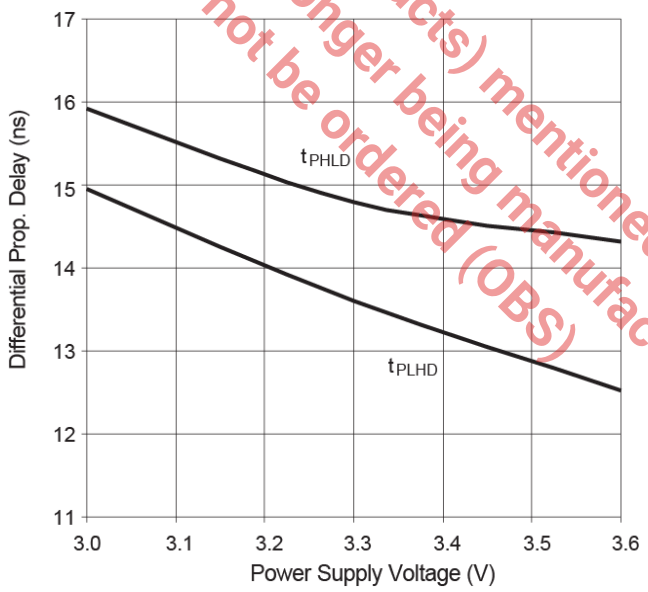

The product (or products) mentioned in this data sheet are no longer being manufactured and may not be ordered (OBS)

FIGURE 9. DIFFERENTIAL SKEW VS TEMPERATURE

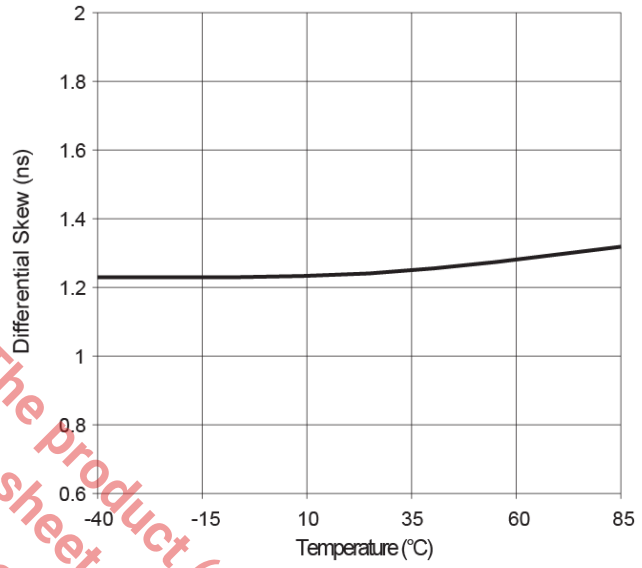

FIGURE 10. DIFFERENTIAL SKEW VS SUPPLY VOLTAGE

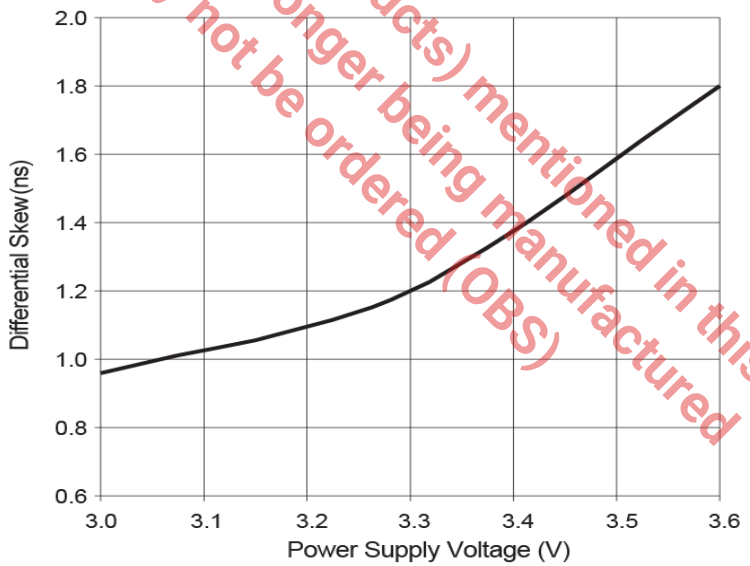

The product (or products) mentioned in this data sheet are no longer being manufactured and may not be ordered (OBS)

FIGURE 11. HIGH OUTPUT VOLTAGE VS CURRENT OVER TEMPERATURE

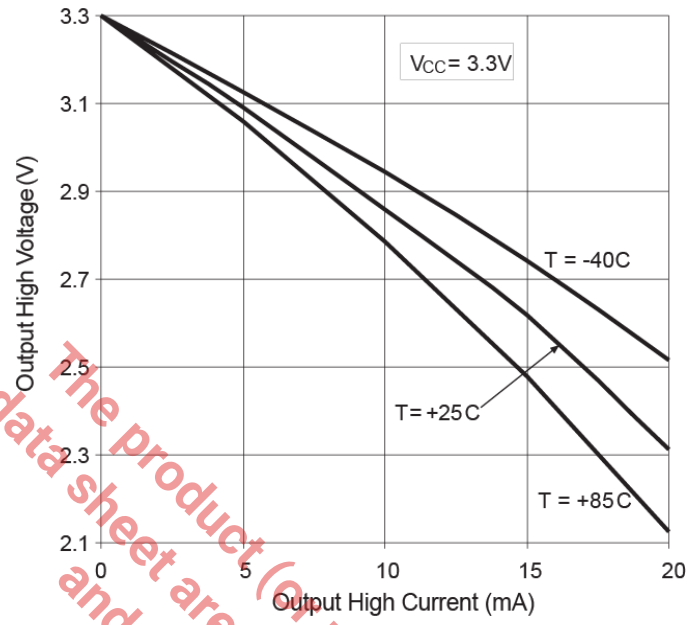

FIGURE 12. HIGH OUTPUT VOLTAGE VS CURRENT OVER SUPPLY VOLTAGE

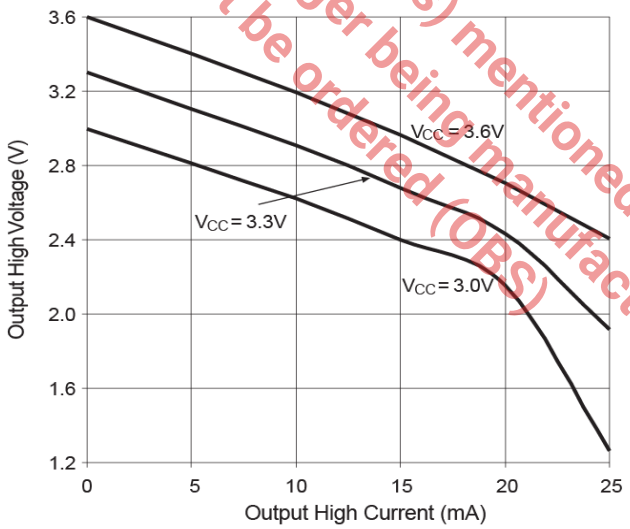

The product (or products) mentioned in this data sheet are no longer being manufactured and may not be ordered (OBS)

FIGURE 13. LOW OUTPUT VOLTAGE VS CURRENT OVER TEMPERATURE

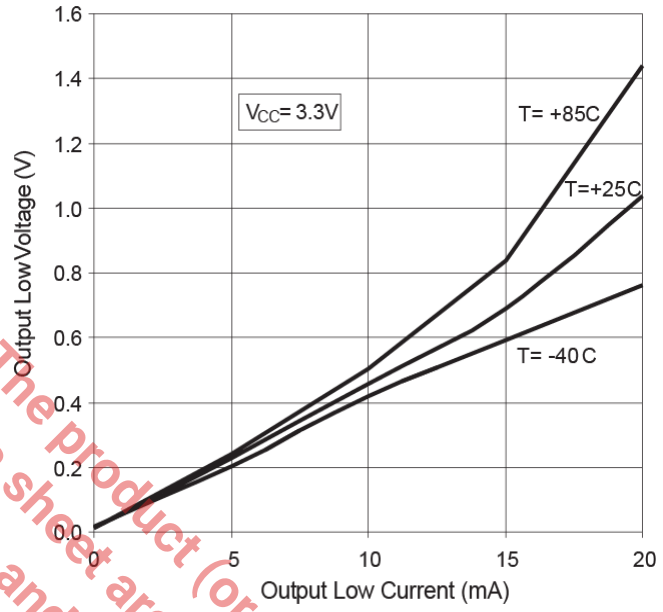

FIGURE 14. LOW OUTPUT VOLTAGE VS CURRENT OVER SUPPLY VOLTAGE

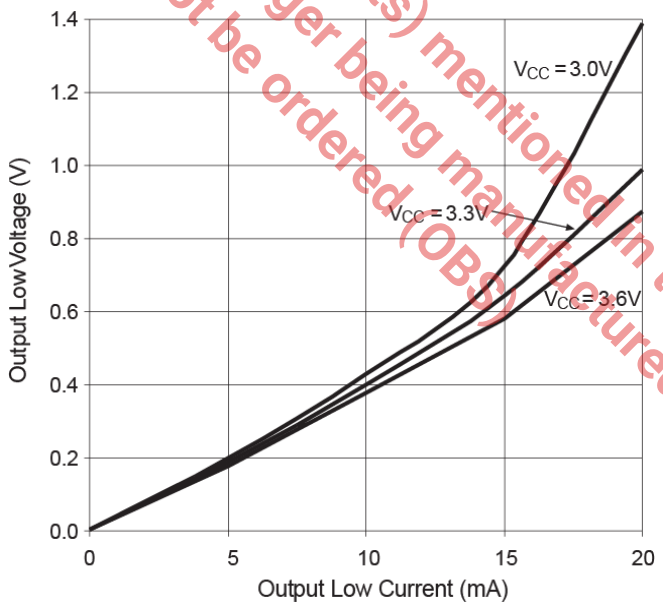

The product (or products) mentioned in this data sheet are no longer being manufactured and may not be ordered (OBS)

FIGURE 15. INPUT RESISTANCE VS INPUT VOLTAGE

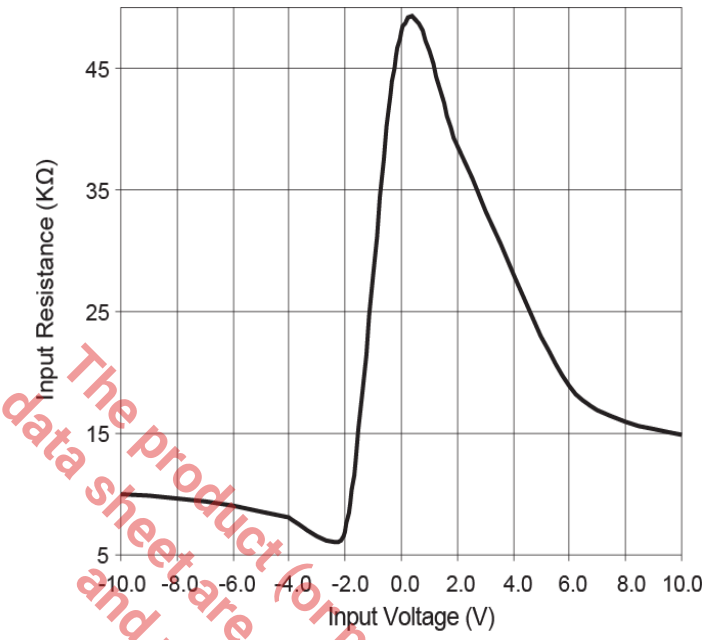

FIGURE 16. INPUT CURRENT VS SUPPLY VOLTAGE

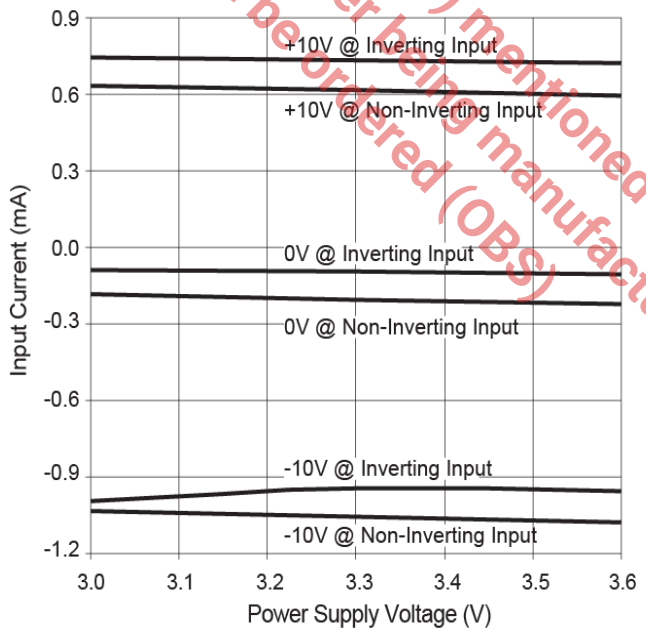

The product (or products) mentioned in this data sheet are no longer being manufactured and may not be ordered (OBS)

FIGURE 17. TRANSITION VOLTAGE VS TEMPERATURE

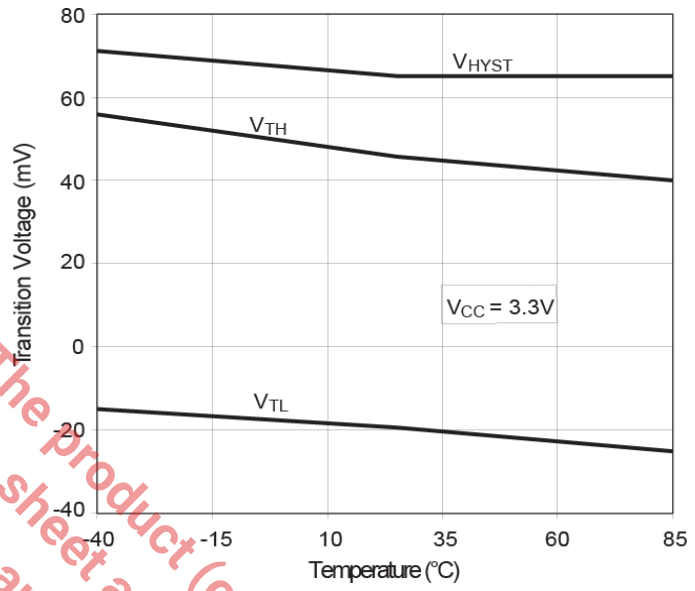

FIGURE 18. TRANSITION VOLTAGE VS SUPPLY VOLTAGE

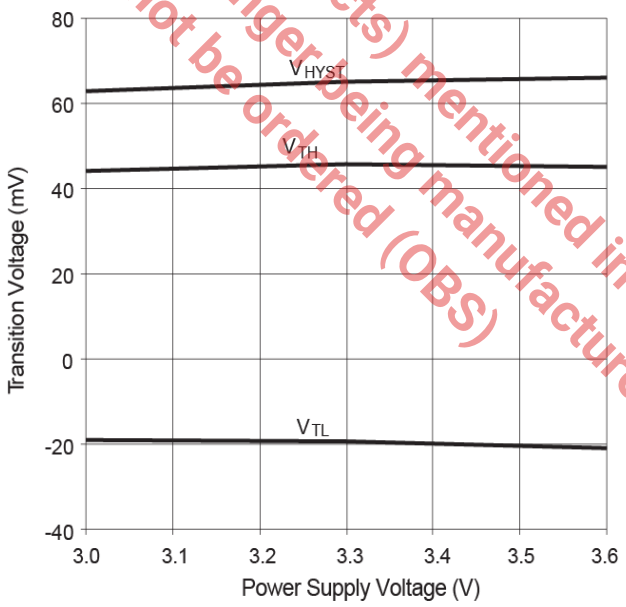

The product (or products) mentioned in this data sheet are no longer being manufactured and may not be ordered (OBS)

FIGURE 19. SUPPLY CURRENT VS TEMPERATURE

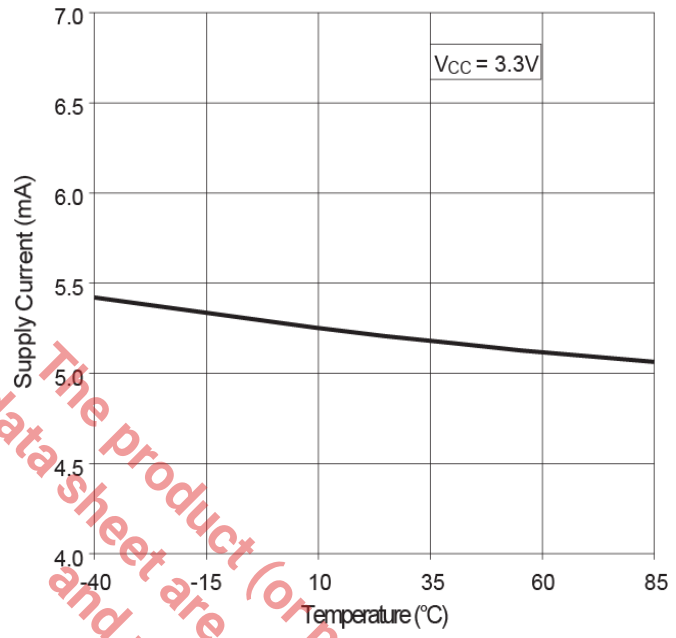

FIGURE 20. DISABLED SUPPLY CURRENT VS SUPPLY VOLTAGE

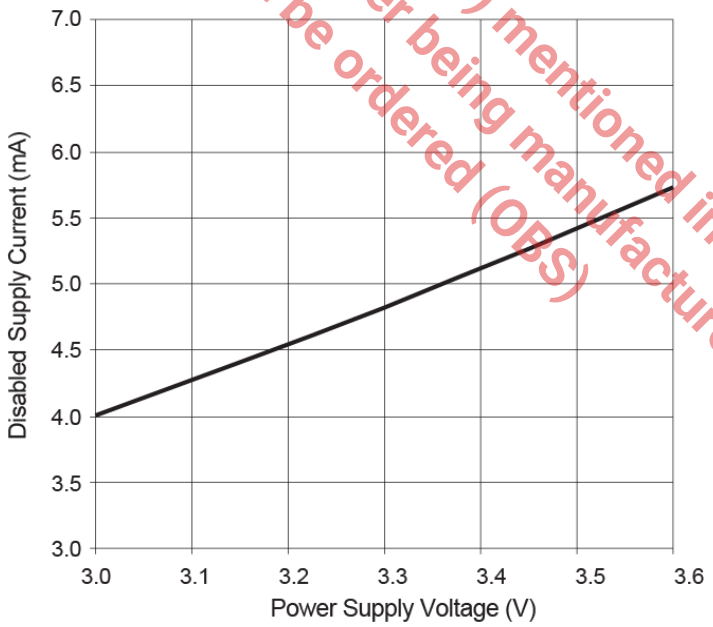

The product (or products) mentioned in this data sheet are no longer being manufactured and may not be ordered (OBS)

FIGURE 21. SUPPLY CURRENT VS DATA RATE

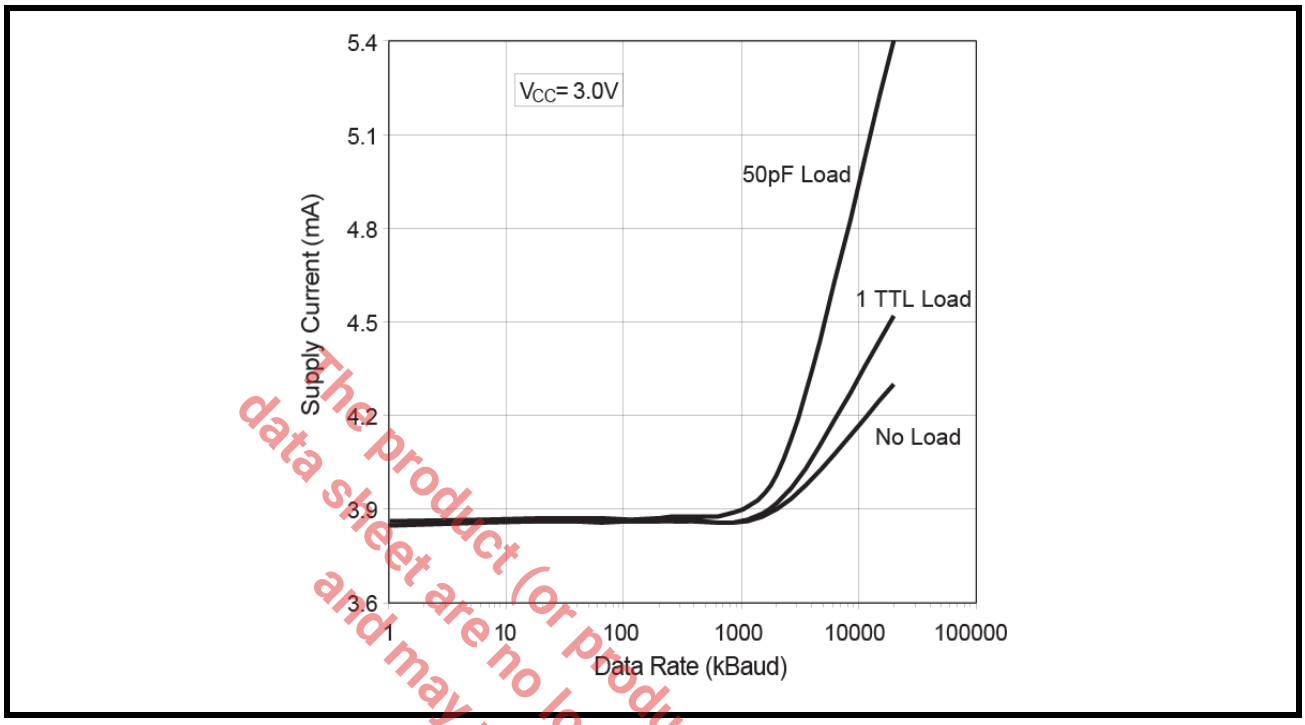

The product (or products) mentioned in this data sheet are no longer being manufactured and may not be ordered (OBS)

1.0 PRODUCT DESCRIPTION

The **SP26LV432** is a low-power quad differential line receiver designed for digital data transmission meeting the specifications of the EIA standard RS-422 serial protocol. The **SP26LV432** features Exar's BiCMOS process allowing low power operational characteristics of CMOS technology while meeting all of the demands of the RS-422 serial protocol up to 50Mbps under load in harsh environments.

The RS-422 standard is ideal for multi-drop applications and for long-distance communication. The RS-422 protocol allows up to 10 receivers to be connected to a data bus, making it an ideal choice for multi-drop applications. Since the cabling can be as long as 4,000 feet, RS-422 Receivers have an input sensitivity of 200mV over the wide (-7.0V to +7.0V) common mode range to accommodate ground potential differences. Internal pull-up and pull-down resistors prevent output oscillation on unused channels. Because the RS-422 is a differential interface, data is virtually immune to noise in the transmission line.

The **SP26LV432** accepts RS-422 levels and translates these into TTL or CMOS output levels. The **SP26LV432** features active HIGH and active LOW receiver enable controls common to all four receiver channels see **Table 1**. A logic HIGH on the ENABLE pin (pin 4) or a logic LOW on the $\overline{\text{ENABLE}}$ pin (pin 12) will enable the receiver outputs. A logic LOW on the ENABLE pin (pin 4) and a logic HIGH on the $\overline{\text{ENABLE}}$ pin (pin 12) will force the receiver outputs into high impedance (high-Z). Refer to the truth table in **Table 1**.

The RS-422 line receivers feature high source and sink current capability. All receivers are internally protected against short circuits on their inputs. The receivers feature tri-state outputs with 6mA source and sink capability. The typical receiver propagation delay is 14ns (35ns max). To minimize reflections, the multipoint bus transmission line should be terminated at both ends in its characteristic impedance, and stub lenghts off the main line should be kept as short as possible.

The product(or products) mentioned in this data sheet are no longer being manufactured and may not be ordered (OBS)

FIGURE 22. TWO-WIRE BALANCED SYSTEM, RS-422

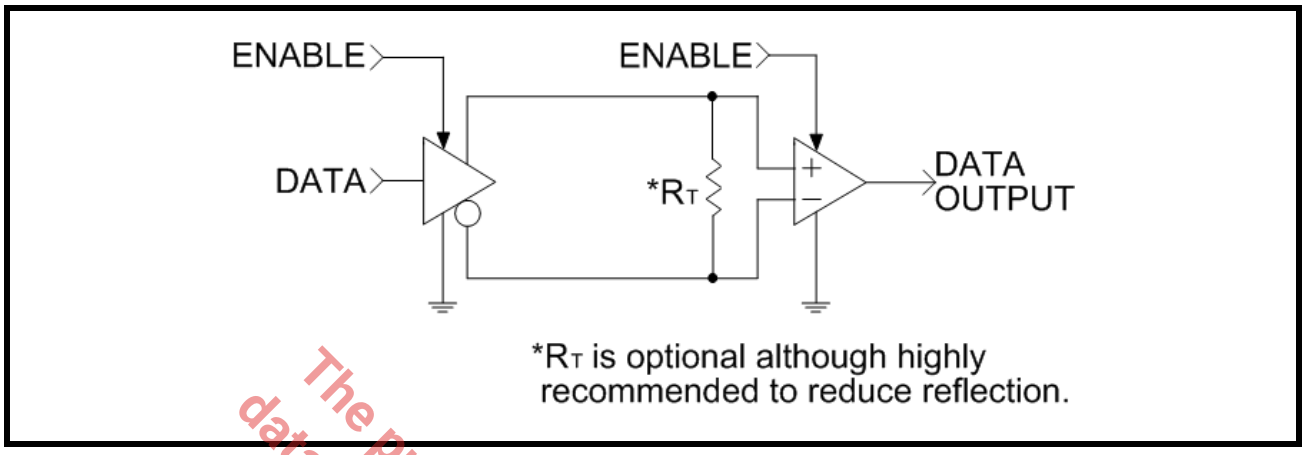

TABLE 1: TRUTH TABLE, ENABLE/DISABLE FUNCTION COMMON TO ALL FOUR RS-422 RECEIVERS

ENABLE	$\overline{\text{ENABLE}}$	INPUT	OUTPUT
LOW	HIGH	don't care	high-Z
HIGH	don't care	$V_{ID} \geq V_{TH}$ (max)	HIGH
HIGH	don't care	$V_{ID} \leq V_{TH}$ (min)	LOW
don't care	LOW	$V_{ID} \geq V_{TH}$ (max)	HIGH
don't care	LOW	$V_{ID} \leq V_{TH}$ (min)	LOW
HIGH	don't care	Open	HIGH
don't care	LOW	Open	HIGH

The product (or products) mentioned in this datasheet are no longer being manufactured and may not be ordered (OBS)

PACKAGE DIMENSIONS (16 PIN NSOIC)

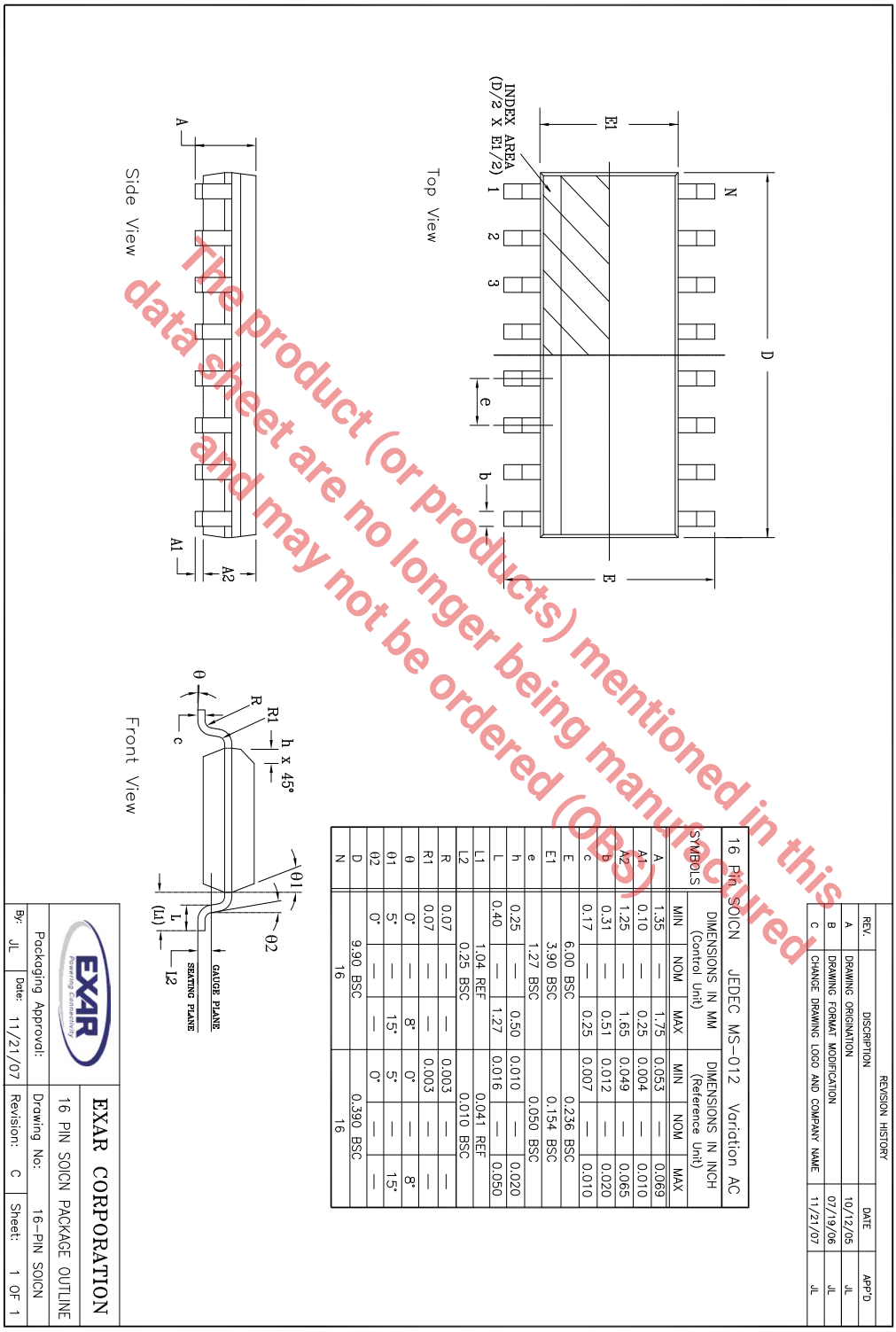

The product (or products) mentioned in this data sheet are no longer being manufactured and may not be ordered (OBS)

REVISION HISTORY

DATE	REVISION	DESCRIPTION
3/08/04	A	Production Release.
3/08/04	B	Include tape and reel p/n's.
4/17/06	C	Fixed Truth Table typo page 1
9/05/08	1.0.0	Converted to Exar standard datasheet format. Added Ordering Information for -40C to +85C operating temperature range NSOIC package. Changed revision to 1.0.0.
6/03/11	1.0.1	Remove SP26LV432CP-L option per PDN 110510-01
3/26/20	1.0.2	Update to MaxLinear logo. Update Ordering Information.

The product (or products) mentioned in this data sheet are no longer being manufactured and may not be ordered (OBS)

MaxLinear, Inc.
5966 La Place Court, Suite 100
Carlsbad, CA 92008
760.692.0711 p.
760.444.8598 f.
www.maxlinear.com

The content of this document is furnished for informational use only, is subject to change without notice, and should not be construed as a commitment by MaxLinear, Inc. MaxLinear, Inc. assumes no responsibility or liability for any errors or inaccuracies that may appear in the informational content contained in this guide. Complying with all applicable copyright laws is the responsibility of the user. Without limiting the rights under copyright, no part of this document may be reproduced into, stored in, or introduced into a retrieval system, or transmitted in any form or by any means (electronic, mechanical, photocopying, recording, or otherwise), or for any purpose, without the express written permission of MaxLinear, Inc.

Maxlinear, Inc. does not recommend the use of any of its products in life support applications where the failure or malfunction of the product can reasonably be expected to cause failure of the life support system or to significantly affect its safety or effectiveness. Products are not authorized for use in such applications unless MaxLinear, Inc. receives, in writing, assurances to its satisfaction that: (a) the risk of injury or damage has been minimized; (b) the user assumes all such risks; (c) potential liability of MaxLinear, Inc. is adequately protected under the circumstances.

MaxLinear, Inc. may have patents, patent applications, trademarks, copyrights, or other intellectual property rights covering subject matter in this document. Except as expressly provided in any written license agreement from MaxLinear, Inc., the furnishing of this document does not give you any license to these patents, trademarks, copyrights, or other intellectual property.

MaxLinear, the MaxLinear logo, and any MaxLinear trademarks, MxL, Full-Spectrum Capture, FSC, G.now, AirPHY and the MaxLinear logo are all on the products sold, are all trademarks of MaxLinear, Inc. or one of MaxLinear's subsidiaries in the U.S.A. and other countries. All rights reserved. Other company trademarks and product names appearing herein are the property of their respective owners.

© 2004 - 2020 MaxLinear, Inc. All rights reserved.