A New Direction in Mixed-Signal

XR81102

Universal Clock - High Frequency LVPECL Clock Synthesizer

General Description

The XR81101-CA02 is a clock synthesizer operating at a 3.3V/2.5V supply with Integer divider, using a 25MHz parallel resonant crystal reference input provides a 125MHz LVPECL outputs. The device is optimized for use with a 25MHz crystal (or system clock) and generates a 125MHz output clock for GE applications. The LVPECL outputs have very low phase noise jitter of sub 150fs, while consuming extremely low power.

The application diagram below shows a typical synthesizer configuration with any standard crystal oscillating in fundamental mode. Internal load capacitors are optionally available to minimize/eliminate external crystal loads. A system clock can also be used to overdrive the oscillator for a synchronous timing system.

The typical phase noise plot below shows the jitter integrated over the 1.875MHz to 20MHz range that is widely used in WAN systems. These clock devices show a very good high frequency noise floor below -150dB.

The XR81102 is a family of Universal Clock synthesizer devices in TSSOP-8 packages. The devices generate ANY frequency in the range of 100MHz to 1.5GHz by utilizing a highly flexible delta sigma modulator and a wide ranging VCO. These devices can be used with standard crystals or external system clock to support a wide variety of applications. This family of products has an extremely low power PLL block with core power consumption 40% less than the equivalent devices from competition. By second sourcing several of the existing sockets, these devices provides a very compelling power efficiency value benefit across all market segments.

Other clock multiplier and/or driver configurations are possible in this clock family and can be requested from the factory.

FEATURES

- XR81102-CA02: Factory configured
- One differential LVPECL output pair
- Crystal oscillator interface which can also be overdriven using a single-ended reference clock
- Output frequency: 125MHz
- Crystal/input frequency: 25MHz, parallel resonant crystal
- RMS phase jitter @ 125MHz, 1.875MHz - 20MHz: < 150fs
- Full 3.3V or 2.5V operating supply
- -40°C to 85°C ambient operating temperature
- Lead-free (RoHS 6) package

APPLICATIONS

- Gigabit Ethernet
- Low-jitter Clock Generation
- Synchronized clock systems

Ordering Information – page 8

The product (or products) mentioned in this data sheet are no longer being manufactured and may not be ordered (OBS)

Typical Application

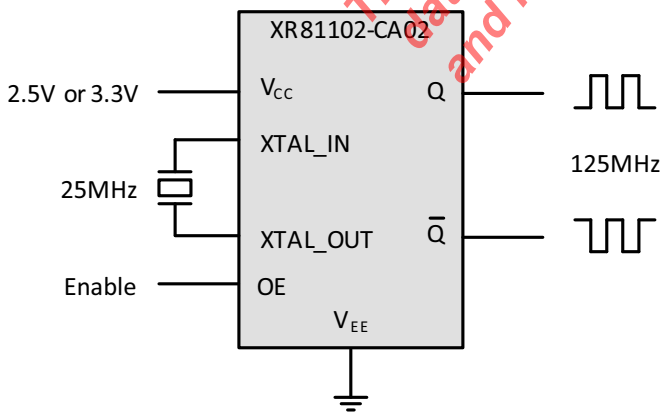

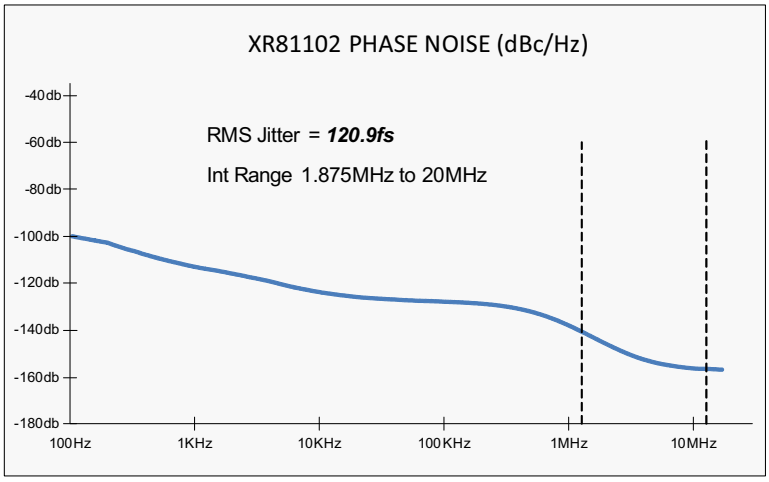

© 2014 Exar Corporation

Absolute Maximum Ratings

Stresses beyond those listed under Absolute Maximum Ratings may cause permanent damage to the device. Exposure to any Maximum Rating condition for extended periods may affect device reliability and lifetime.

Supply Voltage.....+4.2V

Input Voltage.....-0.5V to VCC + 0.5V

Output Voltage.....-0.5V to VCC + 0.5V

Reference Frequency/Input Crystal.....10MHz to 60MHz

Storage Temperature.....-55°C to +125°C

Lead Temperature (Soldering, 10 sec).....300°C

ESD Rating (HBM - Human Body Model).....2kV

Operating Conditions

Operating Temperature Range.....-40°C to +85°C

The product (or products) mentioned in this data sheet are no longer being manufactured and may not be ordered (OBS)

Electrical Characteristics

Unless otherwise noted: T_A = -40°C to +85°C, V_{CC} = 3.3V±5% or 2.5V±5%, V_{EE} = 0V

Symbol	Parameter	Conditions	*	Min	Typ	Max	Units
3.3V Power Supply DC Characteristics							
V_{CC}	Power Supply Voltage		•	3.135	3.3	3.465	V
I_{EE}	Power Supply Current	Measured at 156.25MHz and includes the output load current			68		mA
2.5V Power Supply DC Characteristics							
V_{CC}	Power Supply Voltage		•	2.375	2.5	2.625	V
I_{EE}	Power Supply Current	Measured at 156.25MHz and includes the output load current			58		mA
LVCMOS/LVTTL DC Characteristics							
V_{IH}	Input High Voltage	V_{CC} = 3.465V	•	2.42		V_{CC} + 0.3	V
		V_{CC} = 2.625V	•	1.83		V_{CC} + 0.3	V
V_{IL}	Input Low Voltage	V_{CC} = 3.465V	•	-0.3		1.03	V
		V_{CC} = 2.625V	•	-0.3		0.785	V
I_{IH}	Input High Current (OE, FSEL[1:0])	V_{IN} = V_{CC} = 3.465V or 2.625V	•			15	µA
I_{IL}	Input Low Current (OE, FSEL[1:0])	V_{IN} = 0V, V_{CC} = 3.465V or 2.625V	•	-10			µA
LVPECL DC Characteristics							
V_{OH}	Output High Voltage		•	V_{CC} - 1.3		V_{CC} - 0.4	V
V_{OL}	Output Low Voltage		•	V_{CC} - 2.0		V_{CC} - 1.6	V
V_{SWING}	Peak-to-Peak Output Voltage Swing		•	0.6		1.2	V
Crystal Characteristics							
X_{Mode}	Mode of Oscillations			Fundamental			
X_f	Frequency				25		MHz
ESR	Equivalent Series Resistance					50	Ω
C_S	Shunt Capacitance					7	pF
AC Characteristics							
f_{OUT}	Output Frequency				125		MHz
$t_{jit}(\phi)$	RMS Phase Jitter	125MHz Integration Range 1.875MHz-20MHz			0.15		pS
$t_{jit}(cc)$	Cycle-to-Cycle Jitter	Using 25MHz, 18pF resonant crystal	•			10	pS
t_R/t_F	Output Rise/Fall Time	20% to 80%	•	100		500	pS
Odc	Output Duty Cycle		•	48		52	%

* Limits applying over the full operating temperature range are denoted by a "•".

The product (or products) mentioned in this data sheet are no longer being manufactured and may not be ordered (OBS)

Pin Configuration

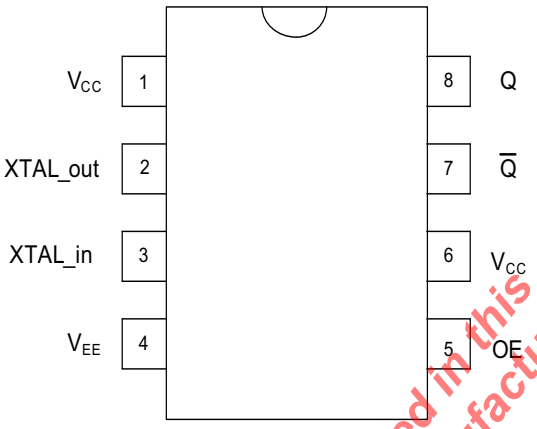

The product (or products) mentioned in this data sheet are no longer being manufactured and may not be ordered (OBS)

Pin Assignments

Pin No.	Pin Name	Type	Description
1	V_{CC}	Supply	Power supply pin.
2	XTAL_OUT	Output	Crystal oscillator output.
3	XTAL_IN	Input	Crystal oscillator input.
4	V_{EE}	Supply	Negative supply pin.
5	OE	Input (900KΩ pull-up)	Output enable pin - LVCMOS/LVTTL active high input. Outputs are enabled when OE = high. Outputs are disabled when OE = low.
6	V_{CC}	Supply	Power supply pin.
7	$\overline{Q}$	Output	Inverted LVPECL output.
8	Q	Output	Positive LVPECL output.

© 2014 Exar Corporation

Functional Block Diagram

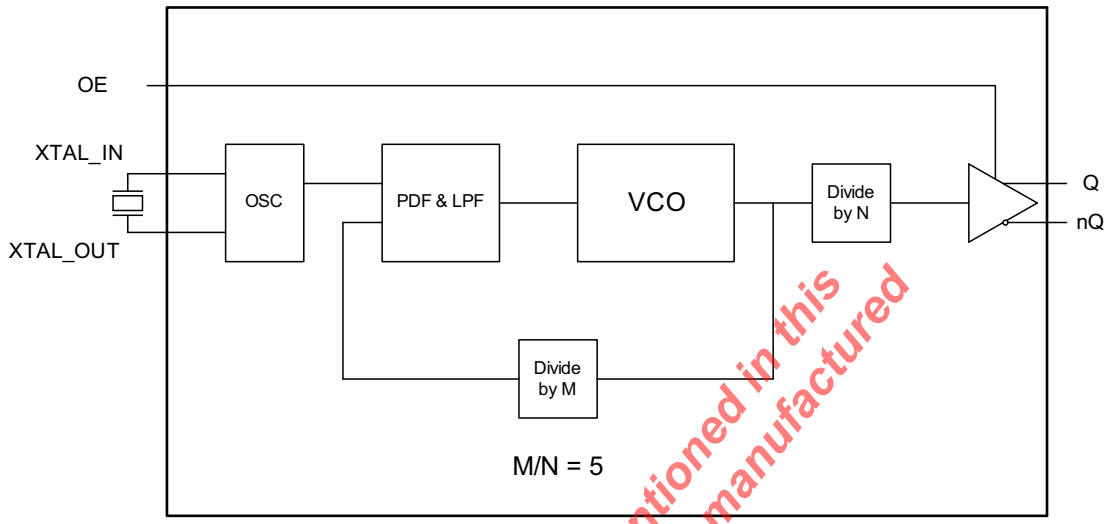

The product (or products) mentioned in this data sheet are no longer being manufactured and may not be ordered (OBS)

Typical Performance Characteristics

Figure 1 shows a typical phase noise performance plot for a 125MHz clock output. The data was taken using the industry standard Agilent E5052B phase noise instrument. The integration range is 1.875MHz to 20MHz.

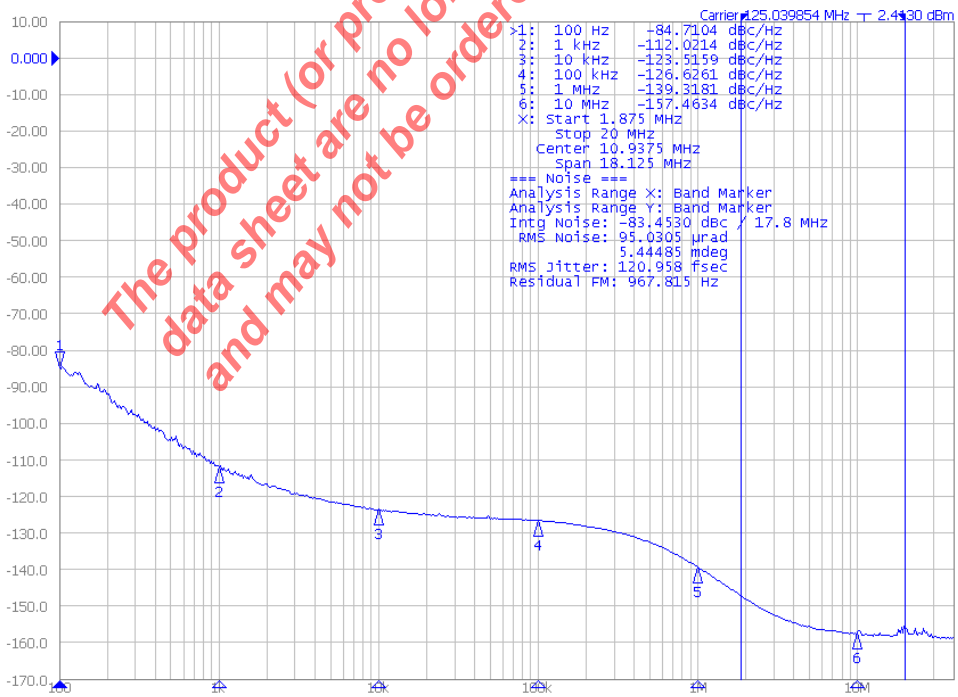

Figure 1: 125MHz Operation, Typical Phase Noise at 3.3V

Application Information

Termination for LVPECL Outputs

The termination schemes shown in Figure 2 and Figure 3 are typical for LVPECL outputs. Matched impedance layout techniques should be used for the LVPECL output pairs to minimize any distortion that could impact your maximum operating frequency. Figure 4 is an alternate termination scheme that uses a Y-termination approach.

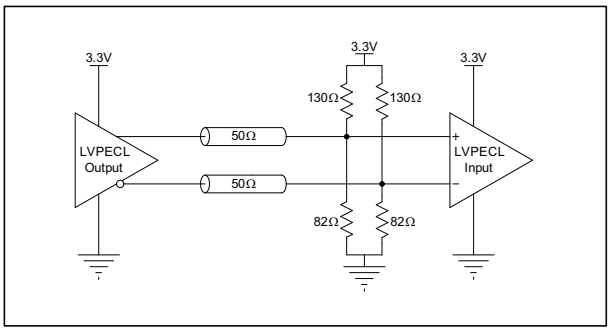

Figure 2: XR81102 3.3V LVPECL Output Termination

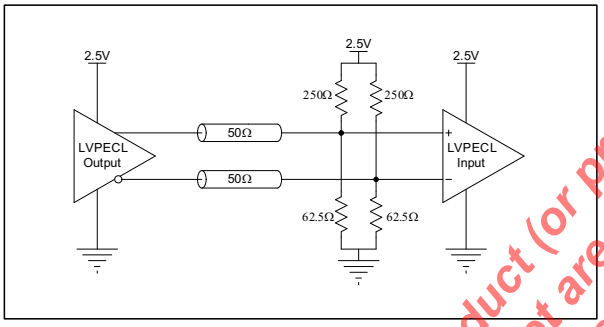

Figure 3: XR81102 2.5V LVPECL Output Termination

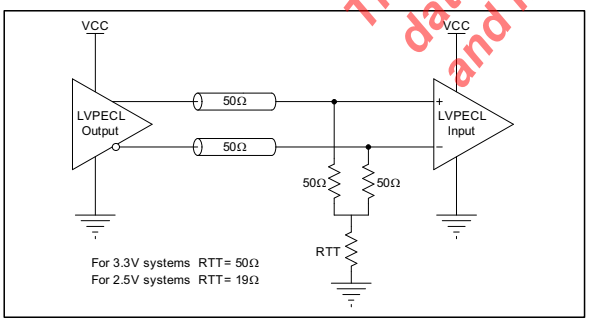

Figure 4: XR81102 Alternate LVPECL Output Termination Using Y-termination

Output Signal Timing Definitions

The following diagrams clarify the common definitions of the AC timing measurements.

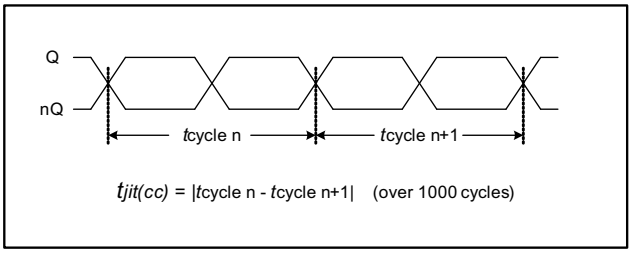

Figure 5: Cycle-to-Cycle Jitter

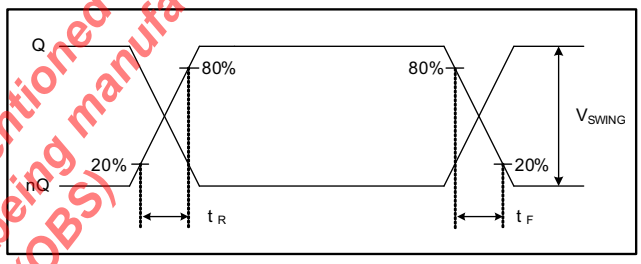

Figure 6: Output Rise/Fall Time and Swing

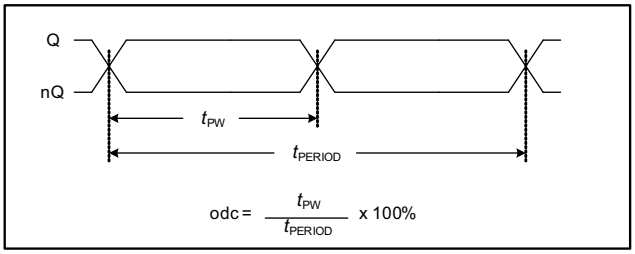

Figure 7: Output Period and Duty Cycle

The product (or products) mentioned in this data sheet are no longer being manufactured and may not be ordered (OBS)

Mechanical Dimensions

8-Pin TSSOP

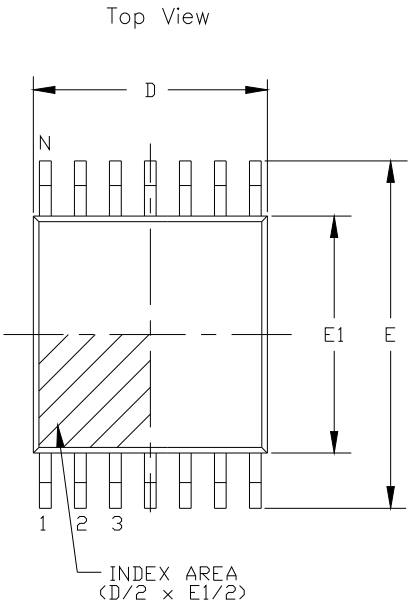

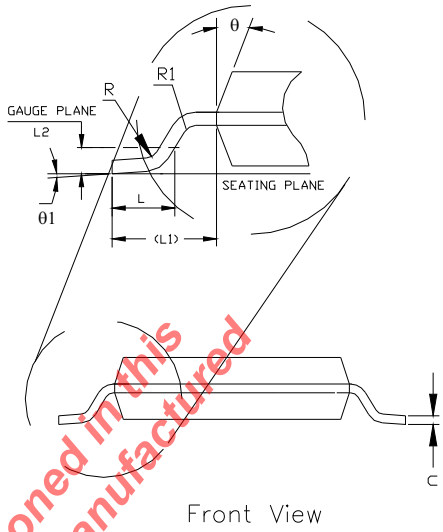

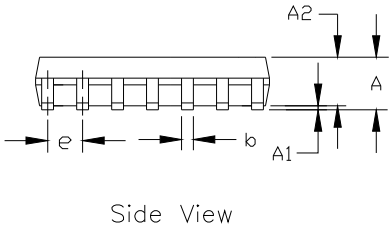

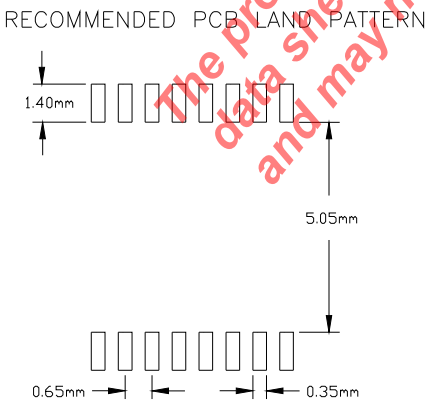

8-Pin TSSOP JEDEC MO-153 Variation AA						
SYMBOLS	DIMENSIONS IN MM (Control Unit)			DIMENSIONS IN INCH (Reference Unit)		
	MIN	NOM	MAX	MIN	NOM	MAX
A	—	—	1.10	—	—	0.043
A1	0.05	—	0.15	0.002	—	0.006
A2	0.85	0.90	0.95	0.033	0.035	0.037
b	0.19	—	0.30	0.007	—	0.012
c	0.09	—	0.20	0.004	—	0.008
E	6.40 BSC			0.252 BSC		
E1	4.30	4.40	4.50	0.169	0.173	0.177
e	0.65 BSC			0.026 BSC		
L	0.50	0.60	0.75	0.020	0.024	0.030
L1	1.00 REF			0.039 REF		
L2	0.25 BSC			0.010 BSC		
R	0.09	—	—	0.035	—	—
R1	0.09	—	—	0.035	—	—
θ	12° REF			12° REF		
θ1	0°	—	8°	0°	—	8°
D	2.90	3.00	3.10	0.114	0.118	0.122
N	8			8		

The product (or products) mentioned in this data sheet are no longer being manufactured and may not be ordered (OBS)

Note : The side, top and landing pattern drawings are general to TSSOP packaging but the table is specific to the 8pin TSSOP

Ordering Information

Part Number	Package	Green	Operating Temperature Range	Shipping Packaging	Marking
XR81102-CA02-F	8-pin TSSOP	Yes	-40°C to +85°C	Tube	T02
XR81102-CA02TR-F	8-pin TSSOP	Yes	-40°C to +85°C	Tape & Reel	T02
XR81102EVB	Eval Board	N/A	N/A	N/A	N/A

Revision History

Revision	Date	Description
1A	April 2014	Initial release.
1B	April 28, 2014	Update to general description. [ECN1421-16	05/25/2014]

The product (or products) mentioned in this data sheet are no longer being manufactured and may not be ordered (OBS)

For Further Assistance:

Email: commtechsupport@exar.com

Exar Technical Documentation: http://www.exar.com/techdoc/

Exar Corporation Headquarters and Sales Offices
48720 Kato Road Tel: +1 (510) 668-7000
Fremont, CA 95438 - USA Fax: +1 (510) 668-7001

A New Direction in Mixed-Signal

NOTICE
EXAR Corporation reserves the right to make changes to the products contained in this publication in order to improve design, performance or reliability. EXAR Corporation assumes no responsibility for the use of any circuits described herein, conveys no license under any patent or other right, and makes no representation that the circuits are free of patent infringement. Charts and schedules contained herein are only for illustration purposes and may vary depending upon a user's specific application. While the information in this publication has been carefully checked; no responsibility, however, is assumed for inaccuracies.

EXAR Corporation does not recommend the use of any of its products in life support applications where the failure or malfunction of the product can reasonably be expected to cause failure of the life support system or to significantly affect its safety or effectiveness. Products are not authorized for use in such applications unless EXAR Corporation receives, in writing, assurances to its satisfaction that: (a) the risk of injury or damage has been minimized; (b) the user assumes all such risks; (c) potential liability of EXAR Corporation is adequately protected under the circumstances.

Reproduction, in part or whole, without the prior written consent of EXAR Corporation is prohibited.